INSTALLER INSTRUCTIONS

CONTENTS

IMPORTANT

When carrying out commissioning of the boiler, you are highly recommended to perform the following checks:

- Make sure that there are no liquids or inflammable materials in the immediate vicinity of the boiler.
- Make sure that the electrical connections have been made correctly and that the earth wire is connected to a good earthing system.
- Open the gas tap and check the soundness of the connections, including that of the burner.
- Make sure that the boiler is set for operation for the type of gas supplied.
- Check that the flue pipe for the outlet of the products of the combustion is unobstructed and has been properly installed.
- Make sure that any shutoff valves are open.
- Make sure that the system is charged with water and is thoroughly vented.
- Check that the circulating pump is not locked.
- Purge the system, bleeding off the air present in the gas pipe by operating the pressure relief valve on the gas valve inlet.
- The installer must provide the user with instruction in operation of the boiler and safety devices and hand over the instruction booklet to the user.

FONDERIE SIME S.p.A. of Via Garbo 27 - Legnago (VR) - Italy declares that its hot water boilers, which bear the CE mark under Gas Directive 90/396/CEE and are fitted with a safety thermostat calibrated to a maximum of 110°C, **are not subject** to application of PED Directive 97/23/CEE as they meet the requirements of article 1 paragraph 3.6 of the Directive.

1 DESCRIPTION OF THE BOILER

1.1 INTRODUCTION

FORMAT DGT HE are premixed gas condensation thermal modules that employ a microprocessor-based technology to control and manage all the functions.
All modules are compliant with European Directives 90/396/CE, 2004/108/CE, 2006/95/CE and 92/42/CE. For optimum installation and operation, always follow the instructions provided in this manual.

1.2 DIMENSIONS

1.2.1 FORMAT DGT HE 12-20 T

ATTENTION:
The **"12-20 T"** version is designed for the connection of a remote boiler, to use it as a boiler **ONLY FOR HEATING** it is necessary:
- to disconnect the D.H.W. sensor (SB)
- set the PAR 2 to 4.

All modules are designed to be used by qualified technical personnel.

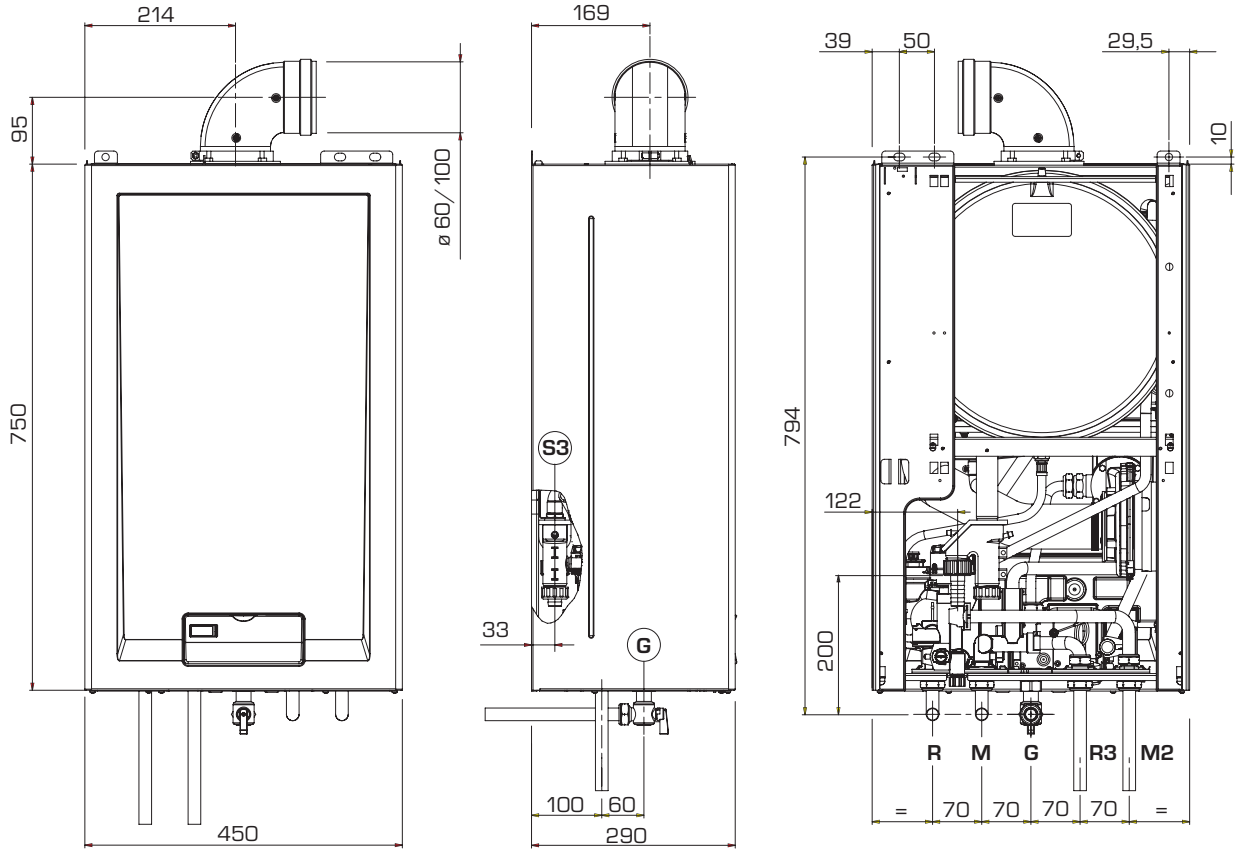

FIXTURES

R	C.H. return	G 3/4" (UNI - ISO 228/1)
M	C.H. flow	G 3/4" (UNI - ISO 228/1)
G	Gas connection	G 3/4" (UNI - ISO 228/1)
R3	D.H.W. tank return	G 3/4" (UNI - ISO 228/1)
M2	D.H.W. tank output	G 3/4" (UNI - ISO 228/1)
S3	Condensation outlet	ø 25

Fig. 1

1.2.2 FORMAT DGT HE 25-30-35

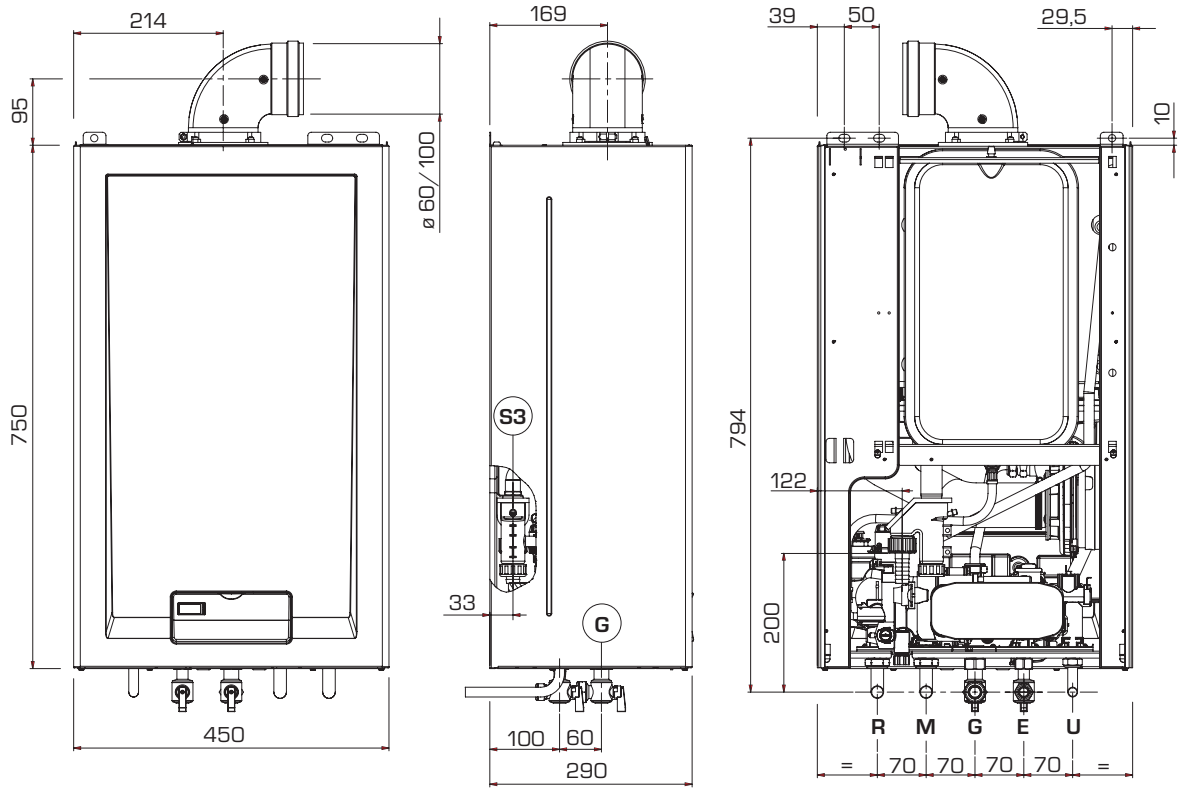

FIXTURES

R	C.H. return	G 3/4" (UNI - ISO 228/1)
M	C.H. flow	G 3/4" (UNI - ISO 228/1)
G	Gas connection	G 3/4" (UNI - ISO 228/1)
E	D.H.W. inlet	G 1/2" (UNI - ISO 228/1)
U	D.H.W. outlet	G 1/2" (UNI - ISO 228/1)
S3	Condensation outlet	ø 25

Fig. 1/a

1.3 TECHNICAL FEATURES

Models		25	30	35	12 T	20 T
Heat output						
Nominal (80-60°C)	kW	19.5	24.6	29.4	11.0	19.5
Nominal (50-30°C)	kW	20.7	26.3	31.2	11.6	20.7
Reduced G20 (80-60°C)	kW	5.7	7.2	8.0	2.7	5.7
Reduced G20 (50-30°C)	kW	6.3	8.0	8.9	3.1	6.3
Reduced G31 (80-60°C)	kW	6.6	7.2	8.0	3.6	6.6
Reduced G31 (50-30°C)	kW	7.3	8.0	8.9	4.1	7.3
Heat input nominal C.H./D.H.W.	kW	20/24	25/30	30/35	11.5	20
Heat input reduced G20/G31	kW	6.0/7.0	7.5	8.2/9.0	3.0/4.0	6.0/7.0
Max/min useful yield (80-60°C)	%	95.2/97.5	96.1/98.2	97.8/98.2	91.2/96.0	95.2/97.5
Max/min useful yield (50-30°C)	%	105.2/103.7	106.2/105.2	108.2/104.3	103.5/102.7	105.2/103.7
Useful yield at 30% of the load (50-30°C)	%	107.3	107.3	109.6	106.0	107.3
Termal efficiency (CEE 92/42 directive)		★★★★	★★★★	★★★★	★★★★	★★★★
Losses after shutdown to 50°C (EN 483)	W	101	106	106	112	101
Supply voltage	V-Hz	230-50	230-50	230-50	230-50	230-50
Adsorbed power consumption	W	125	125	130	125	125
Electrical protection grade	IP	X5D	X5D	X5D	X5D	X5D
C.H. setting range	°C	20/80	20/80	20/80	20/80	20/80
Water content boiler	l	4.3	4.8	4.8	3.8	4.3
Maximum water head	bar	3	3	3	3	3
Maximum temperature	°C	85	85	85	85	85
Capacity of the heating expansion vessel	l	6	6	6	6	6
Pressure of the heating expansion vessel	bar	1.2	1.2	1.2	1.2	1.2
D.H.W. setting range	°C	10/60	10/60	10/60	–	–
D.H.W. flow rate (EN 625)	l/min	10.5	13.4	15.2	–	–
Continuous D.H.W. flow rate Δt 30°C	l/min	11.3	14.1	16.0	–	–
Minimum D.H.W. flow rate	l/min	2.2	2.2	2.2	–	–
D.H.W. pressure min/max	bar	0.5/7.0	0.5/7.0	0.5/7.0	–	–
Exhaust fumes temperature at max flow rate (80-60°C)	°C	75	68	69	68	75
Exhaust fumes temperature at min. flow rate (80-60°C)	°C	56	57	50	57	56
Exhaust fumes temperature at max flow rate (50-30°C)	°C	57	52	52	57	57
Exhaust fumes temperature at min. flow rate (50-30°C)	°C	39	36	33	43	39
Smokes flow min/max	kg/h	10/35	13/44	14/52	5/20	10/35
CO_2 at max/min flow rate G20	%	9.0/9.0	9.0/9.0	9.0/9.0	9.2/9.2	9.0/9.0
CO_2 at max/min flow rate G31	%	10.0/10.0	10.0/10.0	10.0/10.0	10.0/10.0	10.0/10.0
CE certification	n°	1312BT5266				
Category		II2H3P				
Type		B23P-53P/C13-33-43-53-83				
NOx emission class		5 (< 30 mg/kWh)				
Weight when empty	kg	38	41	42	33	38
Main burner nozzle						
Quantity nozzles	n°	1	1	1	1	1
G20/G31 nozzle diameter	ø	7.0/5.0	7.5/6.0	8.5/5.2	4.0/3.1	7.0/5.0
Consumption at maximum/minimum flow rate						
G20	m^3/h	2.54/0.63	3.17/0.79	3.68/0.87	1.21/0.31	2.54/0.63
G31	kg/h	1.86/0.54	2.33/0.58	2.70/0.70	0.89/0.31	1.86/0.54
Gas supply pressure						
G20/G31	mbar	20/37	20/37	20/37	20/37	20/37

1.4 FUNCTIONAL DIAGRAM

FORMAT DGT HE 25-30-35

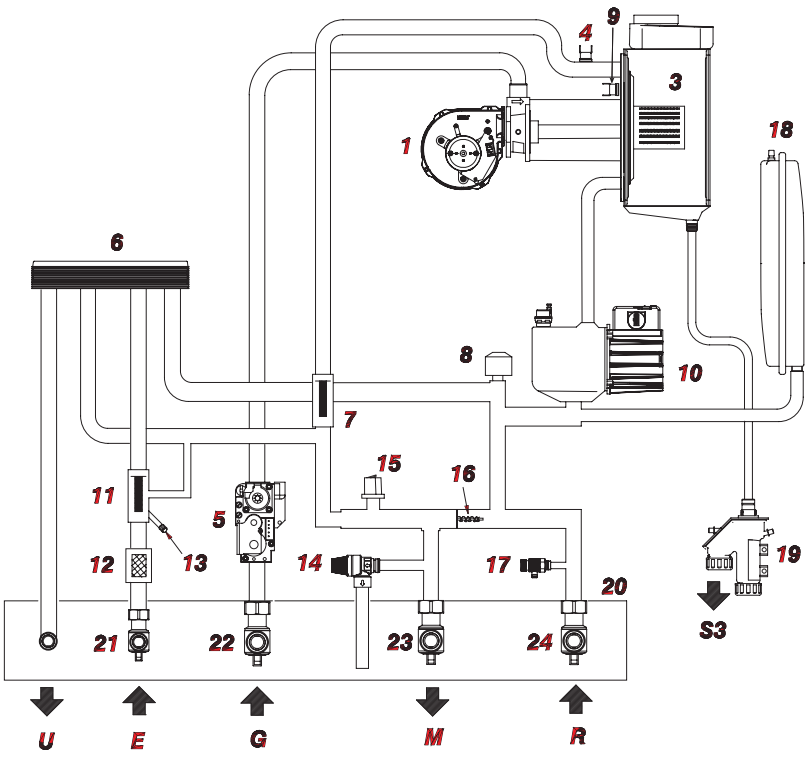

KEY
1 Fan
3 Primary exchanger
4 C.H. sensor (SM)
5 Gas valve
6 D.H.W. exchanger
7 Heating water filter
8 Diverter valve
9 Safety thermostat
10 Circulator with air release vent
11 D.H.W. flow meter
12 Water inlet filter
13 System loading
14 3 BAR safety valve
15 Water pressure valve
16 Automatic bypass
17 Boiler discharge
18 Expansion vessel
19 Condensate drain tap
20 Connection plate (optional)
21 D.H.W. cock (optional)
22 Gas cock (optional)
23 C.H. flow cock (optional)
24 C.H. return cock (optional)
25 D.H.W. sensor (SB)
26 Storage tank discharge (not supplied)
27 D.H.W. expansion vessel (not supplied)
28 D.H.W. safety valve 7 BAR (not supplied)
29 D.H.W. storage tank (not supplied)
30 D.H.W. cock (not supplied)

CONNECTIONS
R C.H. return
M C.H. flow
G Gas connection
E D.H.W. inlet
U D.H.W. outlet
S3 Condensation outlet

FORMAT DGT HE 12-20 T

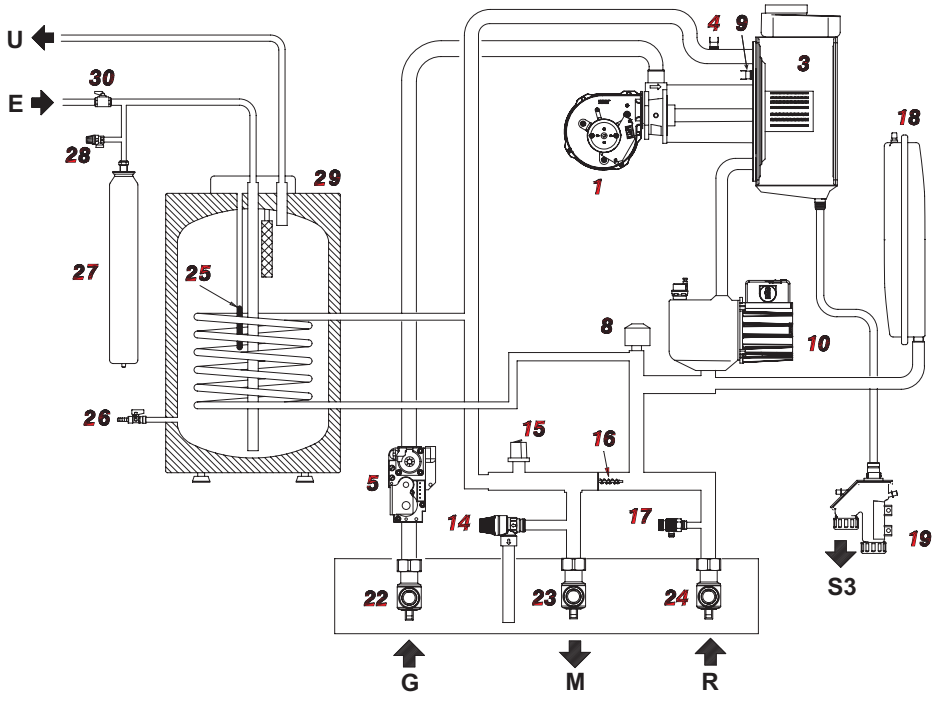

Fig. 2

1.5 MAIN COMPONENTS

FORMAT DGT HE 25-30-35

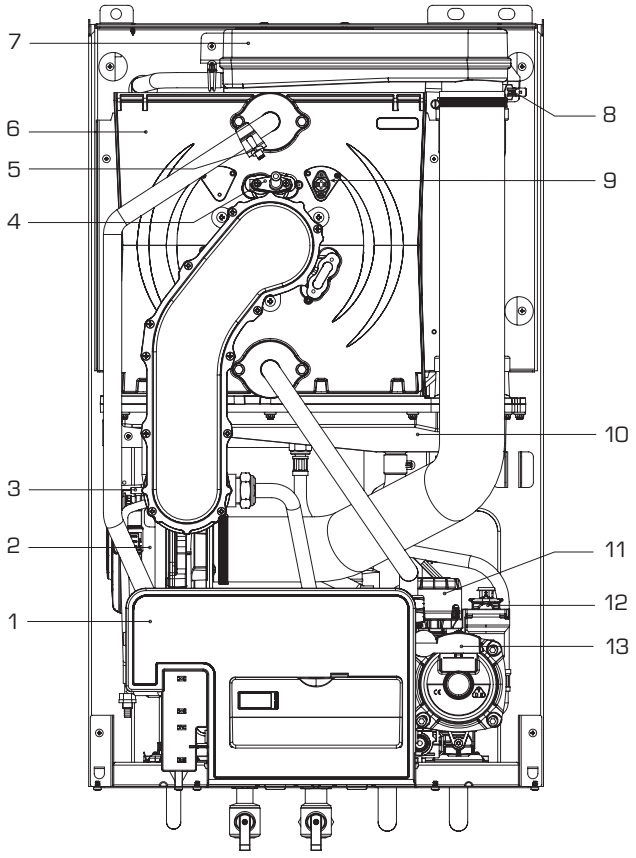

KEY
1 Control panel
2 Fan
3 Mixer
4 Ignition electrode
5 C.H. sensor (SM)
6 Primary exchanger
7 Smoke chamber
8 Fumes sensor
9 Safety thermostat
10 Condensate collection tray
11 Diverter valve
12 Automatic vent
13 Circulator

FORMAT DGT HE 12-20 T

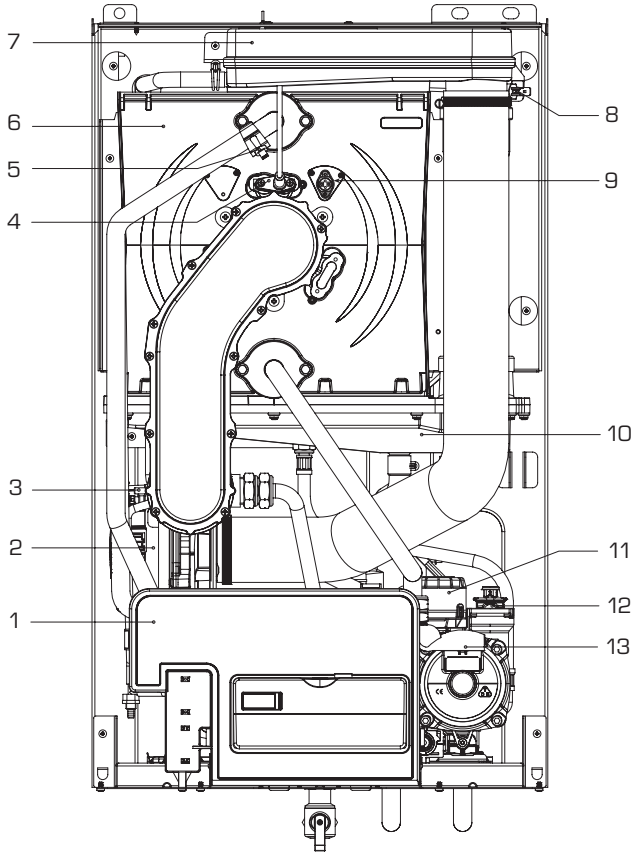

Fig. 3

2 INSTALLATION

The boiler must be installed in a fixed location and only by specialized and qualified firms in compliance with all instructions contained in this manual. Furthermore, the installation must be in accordance with current standards and regulations.

2.1 INSTALLATION

- Boilers can be installed in all domestic environments without any whatsoever limit in terms of location and comburent air supply.
- These boilers can also be installed in partially covered areas, as per EN 297, with a maximum ambient temperature of 60°C and a minimum ambient temperature of -5°C. It is generally advisable to install the boilers below weathered roofs, on the balcony or in a protected niche, to protect them from exposure to weathering agents (rain, hail and snow). All boilers provide a standard antifreeze function.

2.1.1 Anti-freeze function

The boilers are equipped with anti-freeze function which activates the pumps and the burner when the temperature of the water contained inside the appliance drops to below value PAR 10. The anti-freeze function is ensured, however, only if:
- the boiler is correctly connected to the gas and electricity supply circuits;
- the boiler is constantly fed;
- the boiler ignition is not blocked;
- the essential components of the boiler are all in working order.

In these conditions the boiler is protected against frost down to an environmental temperature of -5°C.
ATTENTION: In the case of installation in a place where the temperature drops below 0°C, the connection pipes must be protected.

2.3 COMPLEMENTARY ACCESSORIES

To simplify connections to the hydraulic and gas supplies, it is also possible to use the following accessories:
- Mounting plate, code 8075427
- Kit with bends, code 8075423
- Kit with faucets, code 8091806
- Kit for the replacement of wall-mounting assemblies of other manufacturers, code 8093900
- Solar kit for the instantaneous, code 8105101
- Kit protection connection, code 8095421.

For detailed information on the assembly of fittings, see the instructions contained in the box.

2.5 CONNECTING UP SYSTEM

To protect the heat system from damaging corrosion, incrustation or deposits, before installation it is extremely important to clean the system using suitable products such as, for example, **Sentinel X300 (new systems), X400 and X800 (old systems) or Fernox Cleaner F3**. Complete instructions are provided with the products but, for further information, you may directly contact SENTINEL PERFORMANCE SOLUTIONS LTD or FERNOX COOKSON ELECTRONICS.
For long-term protection agains corrosion and deposits, the use of inhibitors such as **Sentinel X100 or Fernox Protector F1** is recommended after cleaning the system. It is important to check the concentration of the inhibitor after each system modification and during maintenance following the manufacturer's instructions (specific tests are available at your dealer).
The safety valve drain must be connected to a collection funnel to collect any discharge during interventions. If the heating system is on a higher floor than the boiler, install the on/off taps supplied in kit optional on the heating system delivery/return pipes.
WARNING: Failure to clean the heat system or add an adequate inhibitor invalidates the device's warranty.
Gas connections must be made in accordance with current standards and regulations. When dimensioning gas pipes from the meter to the module, both capacity volume (consumption) in m^3/h and gas density must be taken into account.
The sections of the piping making up the system must be such as to guarantee a supply of gas sufficient to cover the maximum demand, limiting pressure loss between the gas meter and any apparatus being used to not greater than:
- 1.0 mbar for family II gases (natural gas);
- 2.0 mbar for family III gases (butane or propane).

An adhesive data plate is sticked inside the front panel; it contains all the technical data identifying the boiler and the type of gas for which the boiler is arranged.

2.5.1 Connection of condensation water trap

The drip board and its water trap must be connected to a civil drain through a pipe with a slope of at least 5 mm per metre to ensure drainage of condensation water.
The plastic pipes normally used for civil drains are the only type of pipe which is appropriate for conveying condensation to the building's sewer pipes.

2.5.2 Filter on the gas pipe

The gas valve is supplied ex factory with an inlet filter, which, however, is not adequate to entrap all the impurities in the gas or in gas main pipes.
To prevent malfunctioning of the valve, or in certain cases even to cut out the safety device with which the valve is equipped, install an adequate filter on the gas pipe.

2.6 SYSTEM FILLING

Filling of the boiler and the system is done by the system filling (3 fig. 6).
The charge pressure, with the system cold, must be between **1** and **1.2 bar**.
To empty the system, turn the boiler off

FORMAT DGT HE 25-30-35

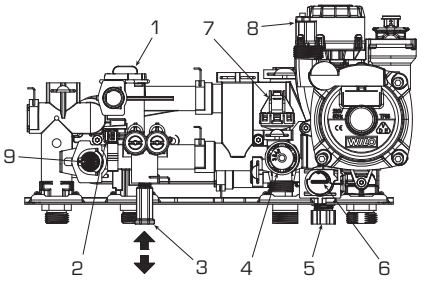

FORMAT DGT HE 12-20 T"

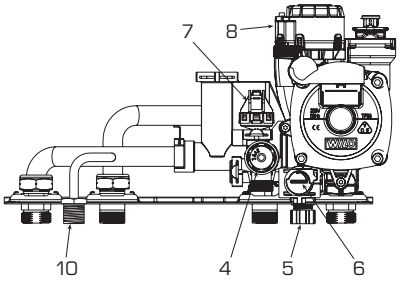

KEY
1 D.H.W. flow meter (white)
2 Sensor effect HALL (blue)
3 System filling (blue)
4 3 BAR safety valve
5 Boiler discharge
6 Automatic by-pass (blue)
7 Water pressure valve
8 Diverter valve
9 Heating water filter (blue)
10 System loading connection

NOTE: They are evidenced in blue/white the members for which are previewed the verification and the control.

Fig. 6

and act on the boiler drain (5 fig. 6).

NB: In "T" vers. loading is achieved by the appropriate connection (10 fig. 6).

2.7 INSTALLATION OF COAXIAL DUCT (ø 60/100 - ø 80/125)

The axial suction and discharge pipes are supplied in a special kit (that can be purchased separately) along with assembly instructions.
The diagrams of fig. 8 illustrate some examples of different types of discharge modalities allowed and the maximum lengths that can be reached.

2.8 INSTALLATION OF SEPARATE DUCTS (ø 80 - ø 60)

The kit with dedicated pipes enables to separate the exhaust fumes pipes from the air suction pipes (fig. 9):
- for ø 80 pipes, divider code 8093050 is provided upon request.
- for ø 60 pipes, divider code 8093060 is provided upon request.

The maximum overall length, resulting from the sum of all the suction and discharge pipes, is determined by the load losses of the single connected accessories and should not exceed 10 mm H_2O (version 12) - 13 mm H_2O (version 20) - 15 mm H_2O (version 25-30-35)
(ATTENTION: the total length of each pipe should not exceed 50 m, even if the total loss is below the maximum applicable loss.)

See **Table 1-1/a** for information on the load losses of single accessories and the example of fig. 9/a for information on how to calculate load losses.

2.8.1 Separate ducts kit

The diagrams of figure 10 show a few examples of the permitted exhausts configurations.

2.8.2 Connection to existing flues

The ø 80 or ø 60 exhaust pipe can also be connected to existing flues.
When the boiler runs at low temperature, it is possible to use standard flues provided that:
- The flue is not be used by other boilers.
- The interior of the flue is protected to prevent a direct contact with condensation from the boiler. The products of combustion must be conveyed through a flexible or rigid plastic pipe around 100 to 150 mm in diameter, and condensation must be siphoned off at the foot of the pipe. The usable height of the water trap must be at least 150 mm.

IMPORTANT:
- **The insertion of each additional 90° bend with a diameter of 60/100 reduces the available section by 1.5 meters.**
- **The insertion of each additional 90° bend with a diameter of 80/125 reduces the available section by 2 meters.**
- **Each additional 45° curve installed reduces the available length by 1.0 metres.**
- **During assembly it is important to make sure that the kit with axial pipes. (1) is positioned horizontally.**

NOTE
Before connecting accessories, it is always advisable to lubricate the internal part of the gaskets with silicon products. Avoid using oils and greases.

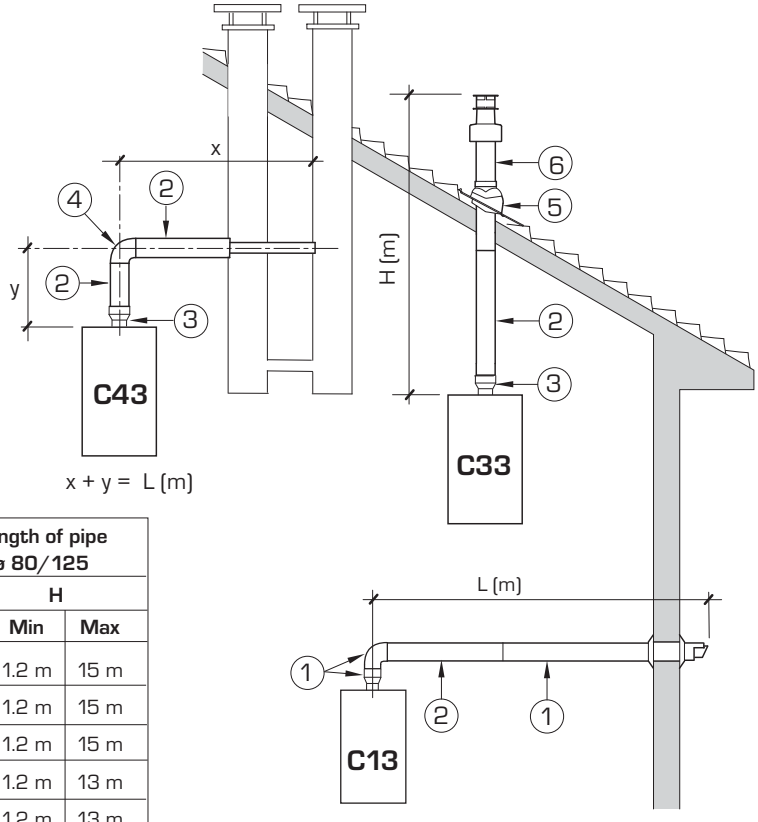

Model	Length of pipe ø 60/100			Length of pipe ø 80/125		
	L	H		L	H	
		Min	Max		Min	Max
12 T	6 m	1.3 m	8 m	12 m	1.2 m	15 m
20 T	6 m	1.3 m	8 m	12 m	1.2 m	15 m
25	6 m	1.3 m	8 m	12 m	1.2 m	15 m
30	5 m	1.3 m	7 m	10 m	1.2 m	13 m
35	4 m	1.3 m	6 m	8 m	1.2 m	13 m

LIST OF ø 60/100 ACCESSORIES

1 Coaxial duct kit code 8096250
2a Extension L. 1000 code 8096150
2b Extension L. 500 code 8096151
3 Vertical extension L. 140 with coupling code 8086950
4a Additional 90° curve code 8095850
4b Additional 45° curve code 8095950
5 Tile for joint code 8091300
6 Terminal for roof exit L. 1285 code 8091205

LIST OF ø 80/125 ACCESSORIES

1 Coaxial duct kit code 8096253
2a Extension L. 1000 code 8096171
2b Extension L. 500 code 8096170
3 Adapter for ø 80/125 code 8093150
4a Additional 90° curve code 8095870
4b Additional 45° curve code 8095970
5 Tile for joint code 8091300
6 Terminal for roof exit L. 1285 code 8091205

Fig. 8

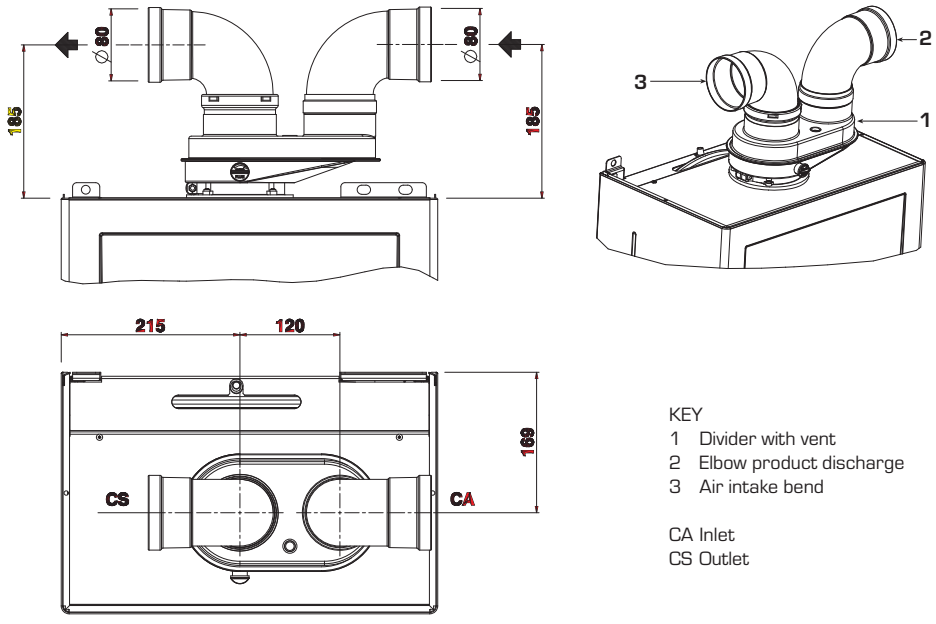

KEY
1 Divider with vent
2 Elbow product discharge
3 Air intake bend

CA Inlet
CS Outlet

Fig. 9

TABLE 1 - ACCESSORIES ø 80

Accessories ø 80	Total head loss (mm H_2O)									
	12		20		25		30		35	
	Inlet	Outlet	Inlet	Outlet	Inlet	Outlet	Inlet	Outlet	Inlet	Outlet
Air/smoke divider	–	–	–	–	–	–	–	–	–	–
90° elbow MF	0.05	0.10	0.15	0.20	0.20	0.25	0.25	0.30	0.30	0.40
45° elbow MF	0.05	0.05	0.10	0.10	0.15	0.15	0.20	0.20	0.25	0.25
Extension L. 1000 (horizontal)	0.05	0.05	0.10	0.10	0.15	0.15	0.20	0.20	0.25	0.25
Extension L. 1000 (vertical)	0.05	0.05	0.10	0.10	0.15	0.15	0.20	0.20	0.25	0.25
Wall terminal	0.05	0.15	0.05	0.20	0.10	0.25	0.10	0.35	0.15	0.50
Wall coaxial exhaust *										
Roof outlet terminal *	0.25	0.05	0.50	0.05	0.80	0.10	1.10	0.15	1.50	0.20

* **The loss of the accessorie in aspiration concludes the collector code 8091400/01**

TABLE 1/a - ACCESSORIES ø 60

Accessories ø 60	Total head loss (mm H_2O)									
	12		20		25		30		35	
	Inlet	Outlet	Inlet	Outlet	Inlet	Outlet	Inlet	Outlet	Inlet	Outlet
Air/smoke divider	1.25	0.25	2,10	0.40	2.50	0.50	2.50	0.50	2.50	0.50
90° elbow MF	0.15	0.40	0.30	0.70	0.40	0.90	0.50	1.10	0.60	1.40
45° elbow MF	0.10	0.25	0.25	0.50	0.35	0.70	0.45	0.90	0.55	1.20
Extension L. 1000 (horizontal)	0.10	0.40	0.25	0.70	0.40	0.90	0.50	1.10	0.60	1.40
Extension L. 1000 (vertical)	0.10	0.30	0.25	0.50	0.40	0.60	0.50	0.70	0.60	0.80
Wall terminal	0.15	0.70	0.30	1.00	0.50	1.20	0.80	1.40	1.10	1.60
Wall coaxial exhaust *										
Roof outlet terminal *	0.25	0.05	0.50	0.05	0.80	0.10	1.10	0.15	1.50	0.20

* **The loss of the accessorie in aspiration concludes the collector code 8091400/01**

Example of allowable installation **"25"** calculation in that the sum of the head losses of the single fittings is less than 7.6 mm H_2O:

	Inlet		**Outlet**	
9 m horizontal pipe ø 80 x 0.15	1.35		–	
9 m horizontal pipe ø 80 x 0.15	–		1.35	
n° 2 90° elbows ø 80 x 0.20	0.40		–	
n° 2 90° elbows ø 80 x 0.25	–		0.50	
n° 1 terminal ø 80	0.10		0.25	
Total head loss	1.85	+	2.10	= **3.95 mm H_2O**

Fig. 9/a

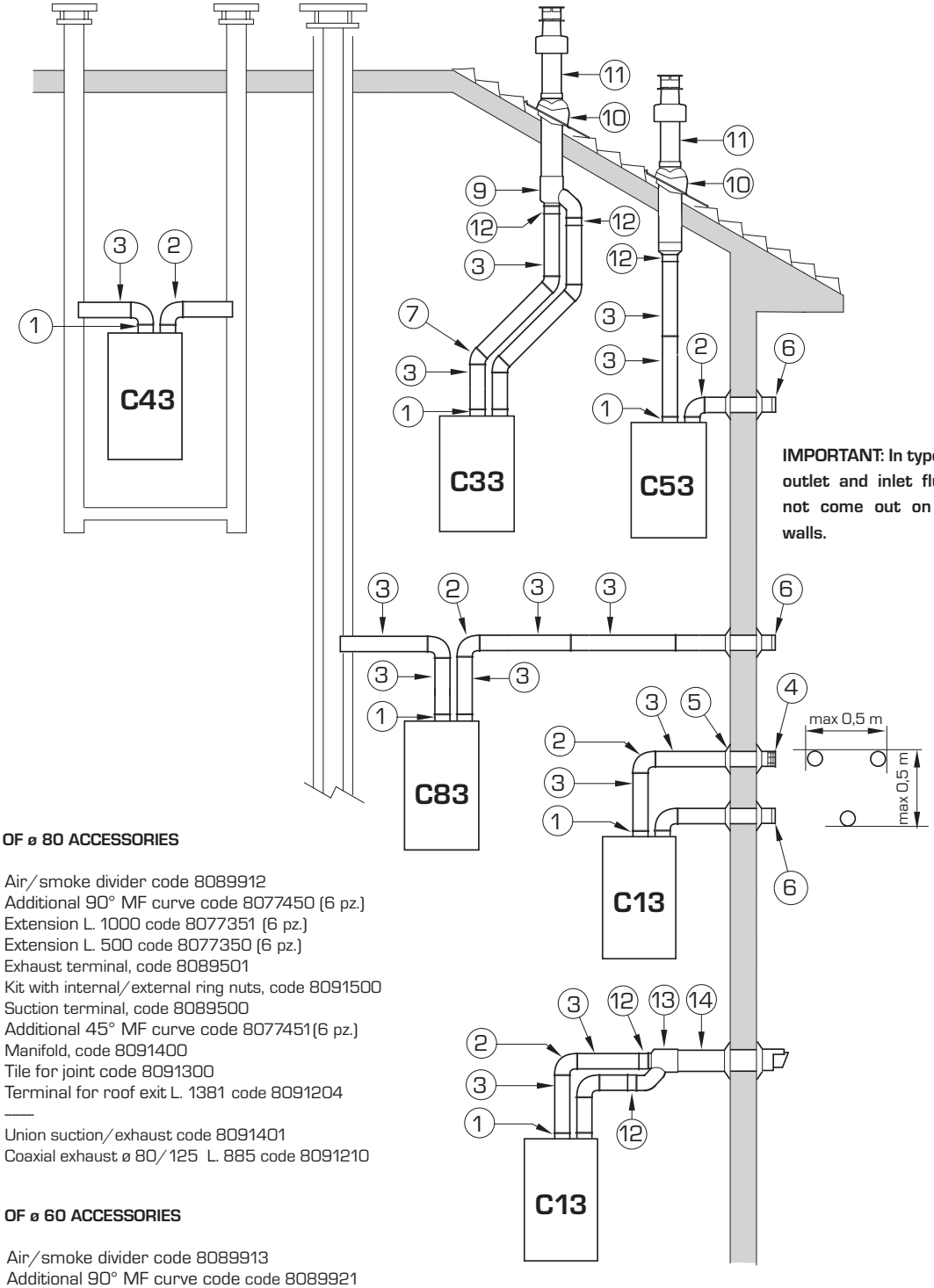

IMPORTANT: In type C53 the outlet and inlet flues must not come out on opposite walls.

LIST OF ø 80 ACCESSORIES

1 Air/smoke divider code 8089912
2 Additional 90° MF curve code 8077450 (6 pz.)
3 a Extension L. 1000 code 8077351 (6 pz.)
3 b Extension L. 500 code 8077350 (6 pz.)
4 Exhaust terminal, code 8089501
5 Kit with internal/external ring nuts, code 8091500
6 Suction terminal, code 8089500
7 Additional 45° MF curve code 8077451(6 pz.)
9 Manifold, code 8091400
10 Tile for joint code 8091300
11 Terminal for roof exit L. 1381 code 8091204
12 ——
13 Union suction/exhaust code 8091401
14 Coaxial exhaust ø 80/125 L. 885 code 8091210

LIST OF ø 60 ACCESSORIES

1 Air/smoke divider code 8089913
2 a Additional 90° MF curve code code 8089921
2 b MF 90° bend with suction tap, code 8089924
3 Extension L. 1000 code 8089920
4 Exhaust terminal, code 8089541
5 Kit with internal/external ring nuts, code 8091510
6 Suction terminal, code 8089540
7 Additional 45° MF bend, code 8089922
9 Manifold, code 8091400
10 Tile for joint code 8091300
11 Terminal for roof exit L. 1381 code 8091204
12 ø 60 MF reduction, code 8089923
13 Union suction/exhaust code 8091401
14 Coaxial exhaust ø 80/125 L. 885 code 8091210

NOTE
Before connecting accessories, it is always advisable to lubricate the internal part of the gaskets with silicon products. Avoid using oils and greases.

Fig. 10

2.9 FORCED EXHAUST (Type B23P-53P)

This type of exhaust pipe is installed using air/smoke divider, code 8093050/60. For kit assembly instructions, refer to point 2.8. Protect the intake with the optional accessory, code 8089501 (fig. 10/a).

The maximum overall length, resulting from the sum of all the suction and discharge pipes, is determined by the load losses of the single connected accessories and should not exceed 10 mm H_2O (version 12) - 13 mm H_2O (version 20) - 15 mm H_2O (version 25-30-35)

(ATTENTION: the total length of each pipe should not exceed 50 m, even if the total loss is below the maximum applicable loss.)

As the maximum pipe length is determined by adding up the flow resistance of the various individual accessories installed, refer to **Table 1-1/a** for calculation.

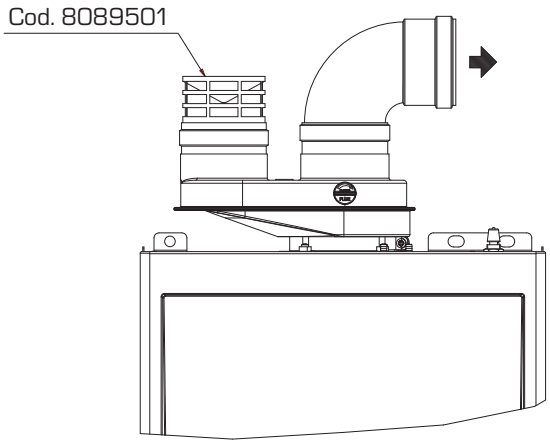

Fig. 10/a

2.10 POSITIONING THE OUTLET TERMINALS

The outlet terminals for forced-draught appliances may be located in the external perimeter walls of the building.

To provide some indications of possible solutions, **Table 3** gives the minimum distances to be observed, with reference to the type of building shown in fig. 11.

2.11 ELECTRICAL CONNECTION

The boiler is supplied with an electric cable. Should this require replacement, it must be purchased exclusively from SIME.

The electric power supply to the boiler must

TABLE 3

Siting of terminal	Appliances from 7 to 35 kW (distances in mm)
A - below openable window	600
B - below ventilation opening	600
C - below eaves	300
D - below balcony (1)	300
E - from adjacent window	400
F - from adjacent ventilation opening	600
G - from horizontal or vertical soil or drain pipes (2)	300
H - from corner of building	300
I - from recess in building	300
L - from ground level or other treadable surface	2500
M - between two terminals set vertically	1500
N - between two terminals set horizontally	1000
O - from a surface facing without openings or terminals	2000
P - as above but with openings and terminals	3000

1) Terminals below a practicable balcony must be located in such a way that the total path of the smoke from its outlet point from the terminal to its outlet point from the external perimeter of the balcony, including the height of possible railings, is not less than 2000 mm.

2) When siting terminals, where materials that may be subject to the action of the combustion products are present in the vicinity, e.g., eaves, gutters and downspouts painted or made of plastic material, projecting timberwork, etc., distances of not less than 1500 mm must be adopted, unless adequate shielding is provided to guard these materials.

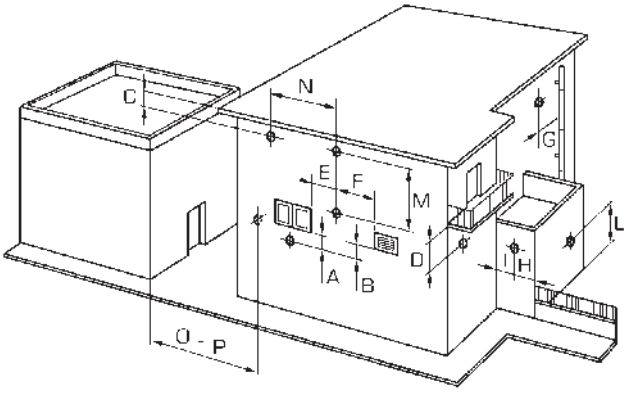

Fig. 11

be 230V - 50Hz single-phase through a fused main switch, with at least 3 mm spacing between contacts.
Respect the L and N polarities and the earth connection.

NOTE: SIME declines all responsibility for injury or damage to persons, animals or things, resulting from the failure to provide for proper earthing of the appliance.

2.11.1 Chronothermostat connection

Connect the chronothermostat as indicated in the boiler electrical diagram **(see figs. 12 and 12/a)** after having removed the existing bridge.
The chronothermostat to be used must be of a class conforming to the standard EN 607301 (clean electrical contact).

2.11.2 Climatic regulator CR 63 connection (optional)

The boiler is designed for connection to a remote control unit CR 63 code 8092219 coupled to an optional expansion kit code 8092240.

The remote control CR 63 unit allows for complete remote control of the boiler, except release of the boiler.

Whenn the connection has been made the boiler display will show the following message: **Cr**.

For installation and use of the remote control, follow the instructions in the package.

2.11.3 External sensor connection (optional)

The boiler is designed for connection to an external temperature sensor, supplied on request (code 8094101), which can automatically regulate the temperature value of the boiler output according to the external temperature.

For installation, follow the instruction in the package.

It is possible to make corrections to the values read by the drill acting on the **PAR 4**.

2.11.4 D.H.W. sensor connection vers. "12-20 T"

The **"12-20 T"** version is provided with a D.H.W. sensor (SB) linked to the connector CN5.

When the boiler is coupled to an external boiling unit, introduce the sensor into the special sleeve in the boiling unit.

ATTENTION: The "12-20 T" version is designed for connection to a remote boiling unit, for use ONLY FOR HEATING it is necessary:

- **to disconnect the D.H.W. sensor (SB);**
- **set PAR 2 = 4.**

Operations must be carried out by authorized and qualified technicians.

2.11.5 Use with different electronic systems

Some examples are given below of boiler systems combined with different electronic systems. Where necessary, the parameters to be set in the boiler are given.
The electrical connections to the boiler refer to the wording on the diagrams (figg. 12-12/a).
Zone valve control is activated with every heating request from remote control.

Description of the letters indicating the components shown on the system diagrams:

M	C.H. flow
R	C.H. return
CR	Remote control CR 63
SE	External temperature sensor
TA 1-2	Zone room thermostat
VZ 1-2	Zone valve
RL 1-2	Zone relay
SI	Hydraulic separator
P 1-2	Zone pump
SB	D.H.W. sensor
PB	D.H.W. pump
IP	Floor system
EXP	Expansion card (code 8092240)
VM	Three-way mixer valve
TSB	Safety thermostat low temperature

1 BASIC SYSTEM

SYSTEM WITH A DIRECT ZONE AND ROOM THERMOSTAT, OR WITH A REMOTE CONTROL (Code 8092219), KIT EXPANSION REMOTE CONTROL (Code 8092240) AND EXTERNAL SENSOR (Code 8094101)

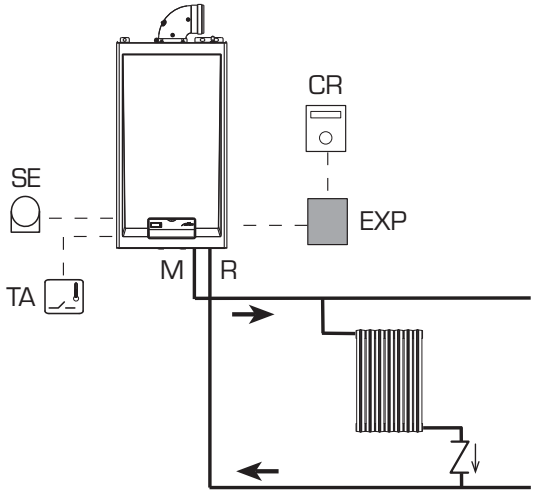

2 BASIC SYSTEM

MULTI-ZONE SYSTEM WITH VALVE, ROOM THERMOSTAT AND EXTERNAL SENSOR (Code 8094101)

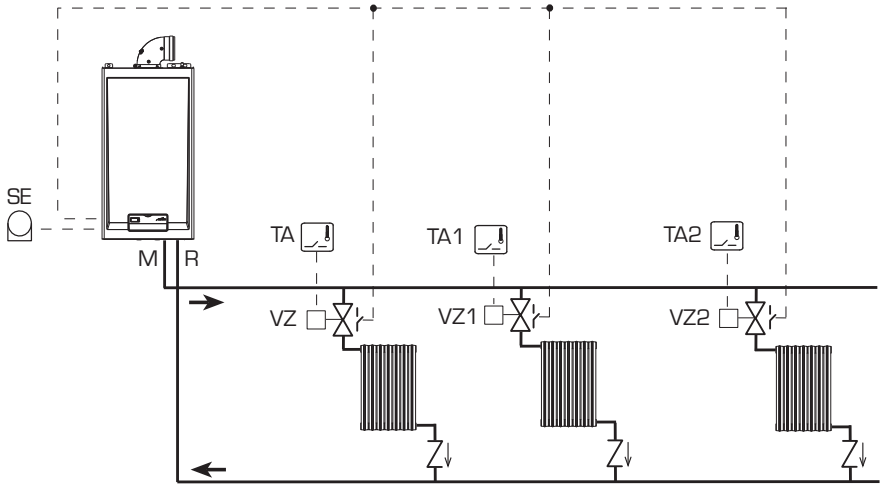

3 BASIC SYSTEM

MULTI-ZONE SYSTEM WITH PUMP, ROOM THERMOSTATS AND EXTERNAL SENSOR (Code 8094101)

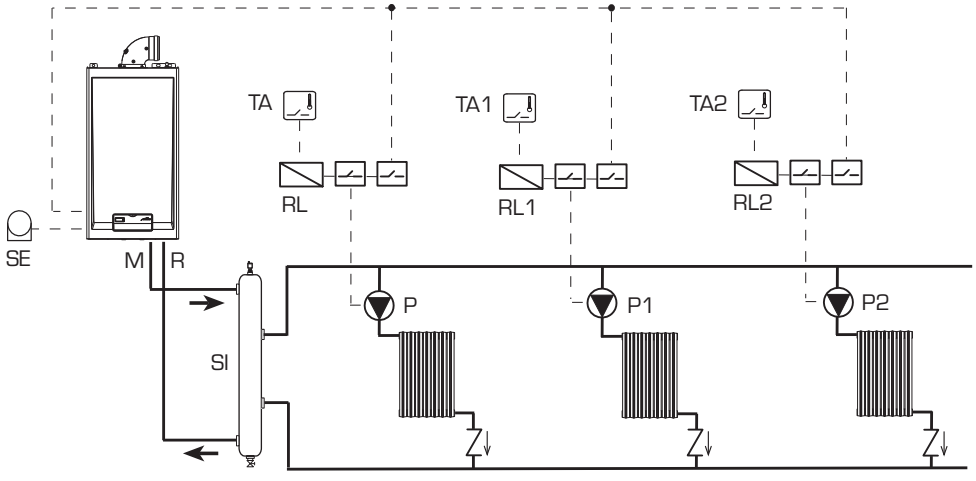

4 BASIC SYSTEM

MULTI-ZONE SYSTEM WITH VALVE, ROOM THERMOSTATS, REMOTE CONTROL (Code 8092219), KIT EXPANSION REMOTE CONTROL (Code 8092240) AND EXTERNAL SENSOR (Code 8094101)

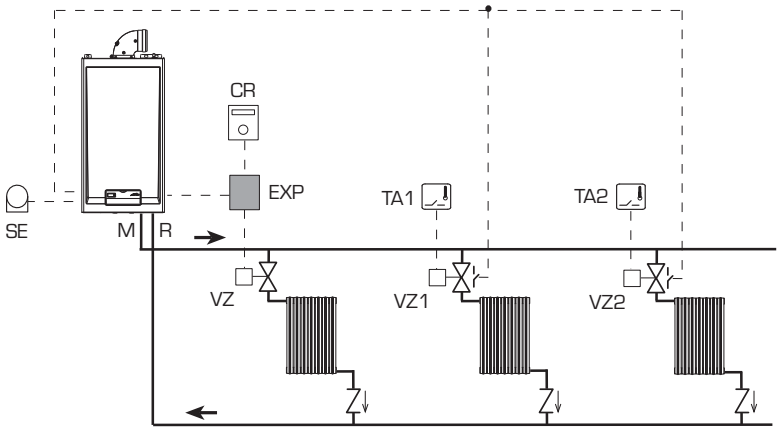

PARAMETERS SETTINGS

Set the opening time of the VZ zone valve:
PAR 17 = SYSTEM PUMP ACTIVATION DELAY

5 BASIC SYSTEM

MULTI-ZONE SYSTEM WITH PUMPS, ROOM THERMOSTATS, REMOTE CONTROL (Code 8092219), KIT EXPANSION REMOTE CONTROL (Code 8092240) AND EXTERNAL SENSOR (Code 8094101)

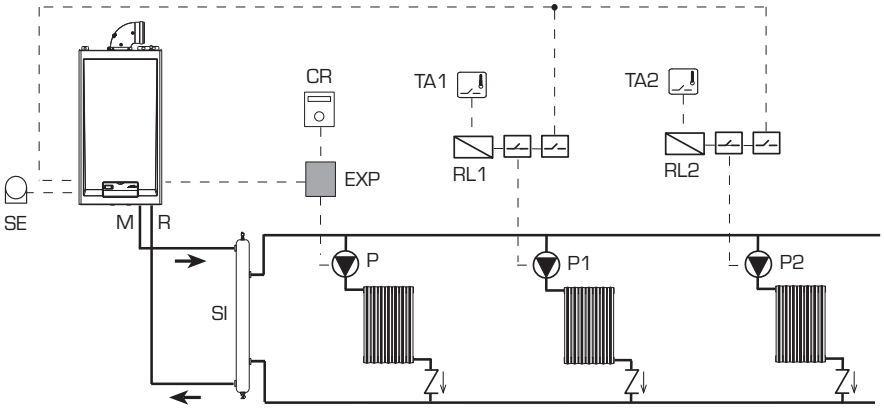

NOTE:
The heating is set from the remote control for the first zone and from the boiler panel for the other zones.
If there is a request for heat at the same time, the boiler is activated at the highest temperature setting.

6 MIXER VALVE SYSTEM

SYSTEM WITH ONE DIRECTED ZONE, AND ONE MIXER ZONE

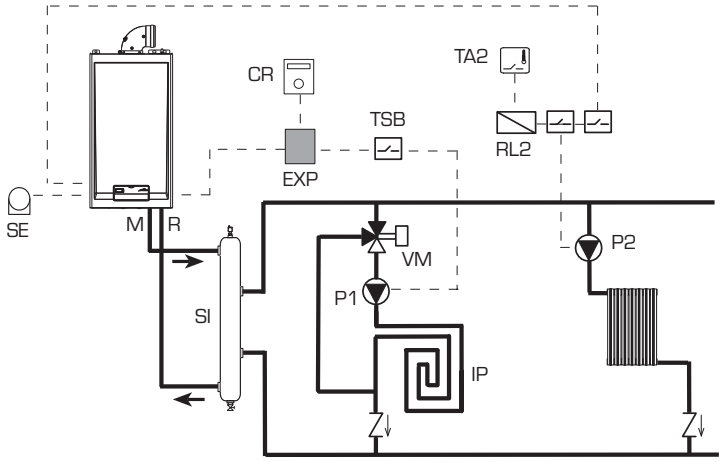

7 SYSTEM WITH REMOTE BOILING UNIT

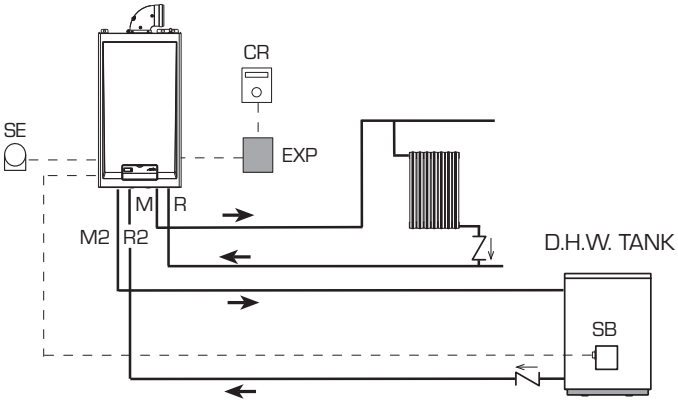

PARAMETER SETTING

FORMAT DGT HE 12-20 T with D.H.W sensor to be set: **PAR 2 = 3**

FORMAT DGT HE 12-20 T only for heating to be set: **PAR 2 = 4**

2.12 BOILER ELECTRICAL "12-20 T"

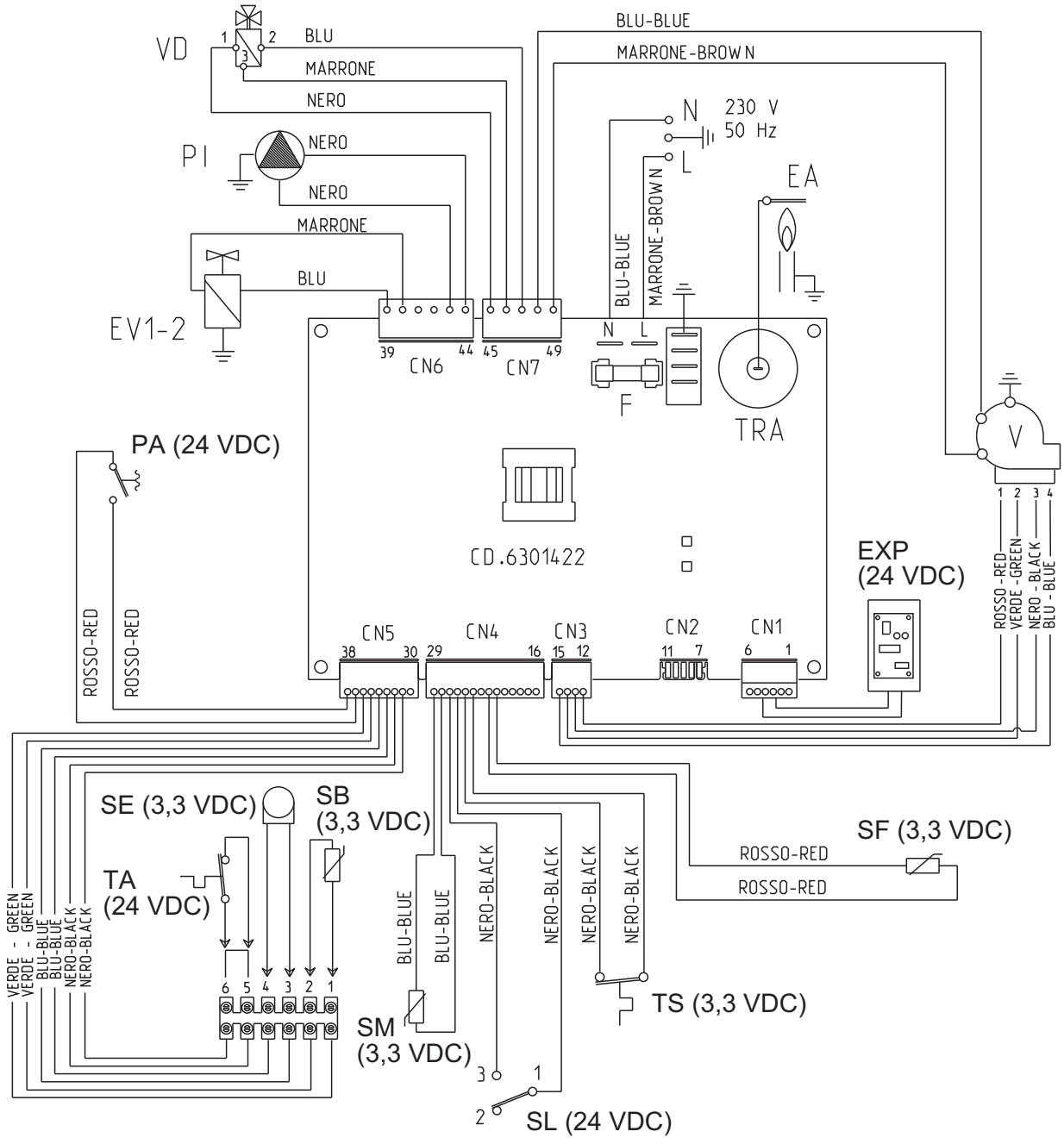

KEY

F	Fuse (1.6 AT)
TRA	Ignition transformer
PI	System pump
V	Fan
EA	Ignition electrode
EV1-2	Gas valve coil
VD	Deviator valve
SL	Level condenses sensor
SM	Heating sensor
SB	D.H.W. sensor
TS	Safety thermostat
SF	Fumes sensor
PA	Water pressure valve
TA	Environment thermostat
SE	External sensor (optional)
EXP	Expansion card remote control (optional)

NOTE: Connect TA to the clamps 5-6 after having removed the bridge.

CONNECTOR SPARE PART CODES:

CN3	code 6316268
CN4	code 6316275
CN5	code 6316253
CN6	code 6316266
CN7	code 6316269

Fig. 12

2.13 BOILER ELECTRICAL "25-30-35"

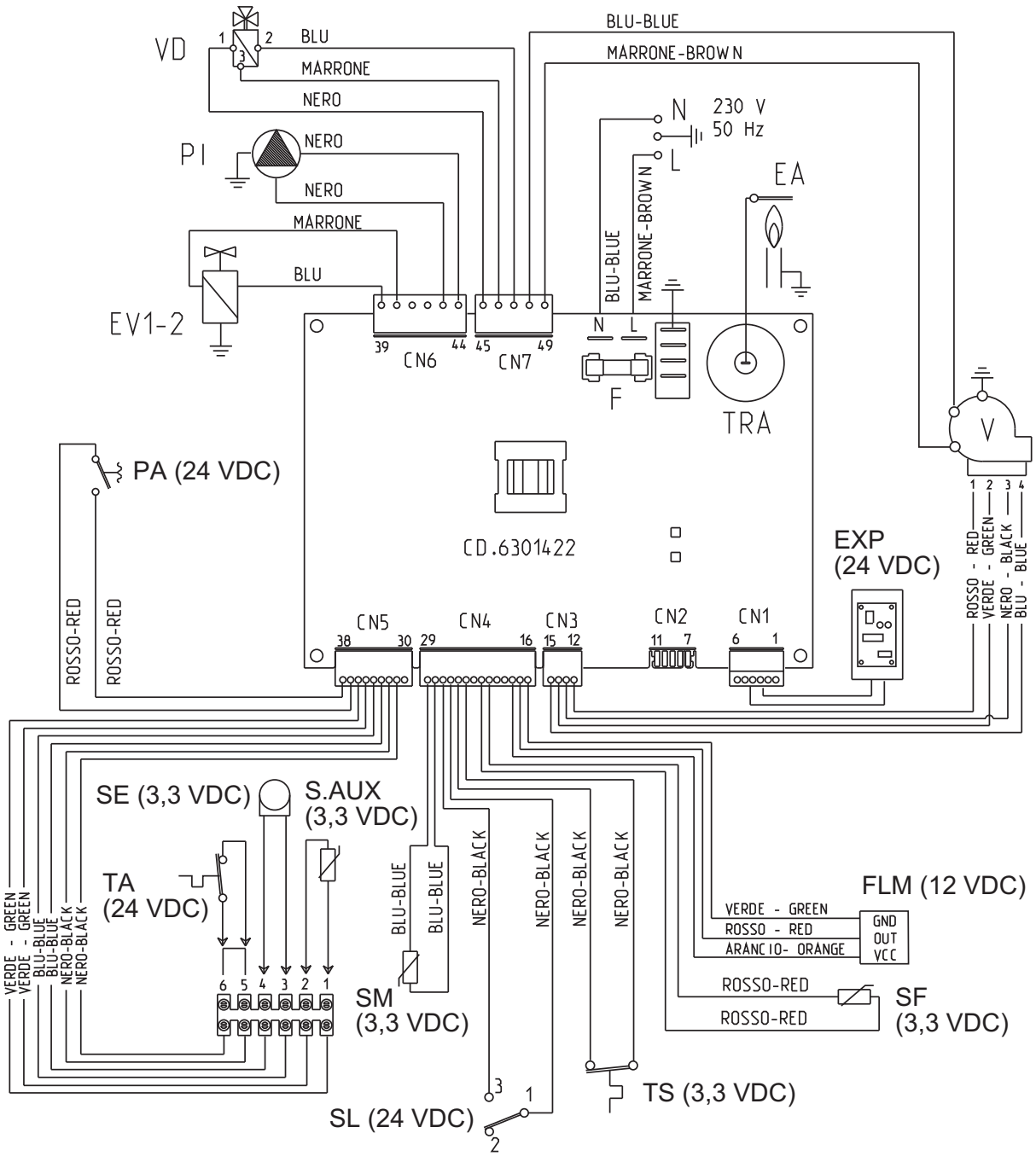

KEY	
F	Fuse (1.6 AT)
TRA	Ignition transformer
PI	System pump
V	Fan
EA	Ignition electrode
EV1-2	Gas valve coil
VD	Deviator valve
SL	Level condenses sensor
SM	Heating sensor
TS	Safety thermostat
FLM	D.H.W. flow meter
SF	Fumes sensor
PA	Water pressure valve
TA	Environment thermostat
SE	External sensor (optional)
S.AUX	Auxiliary sensor
EXP	Expansion card remote control (optional)

NOTE: Connect TA to the clamps 5-6 after having removed the bridge.

CONNECTOR SPARE PART CODES:

CN3	code 6316268
CN4	code 6316267
CN5	code 6316253
CN6	code 6316266
CN7	code 6316269

Fig. 12/a

3 CHARACTERISTICS

3.1 CONTROL PANEL

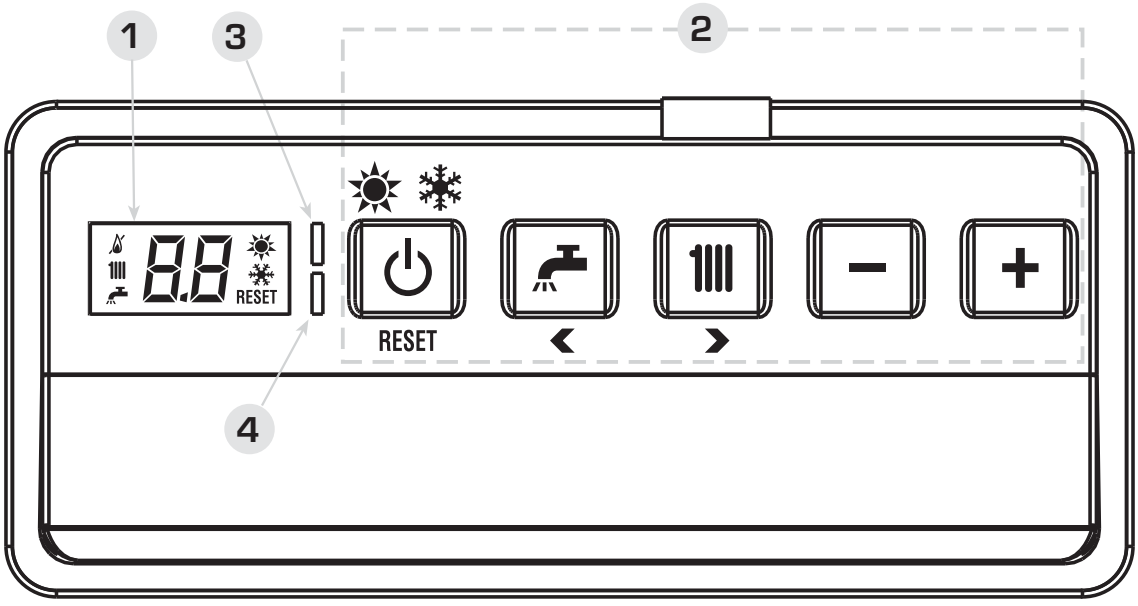

1 - DESCRIPTION OF DISPLAY ICONS

- SUMMER MODE ICON
- WINTER MODE ICON
- D.H.W. MODE ICON
- HEATING MODE ICON
- FUNCTIONING BURNER ICON
- BLOCK DUE TO NO IGNITION/FLAME DETECTION
- RESET — NECESSITY OF RESET
- 8.8 — MAIN DIGITS

2 - DESCRIPTION OF CONTROLS

OPERATING MODE/RESET
By pressing the key in succession, pass to the summer and winter function (stand-by function if permane on the key more than two second).
RESET is only available if a resettable anomaly is signalled

D.H.W. SET
Press the key to display the D.H.W. temperature value set

HEATING SET
Press the key to display the heating temperature value set (value not realtive to the remote control)

DECREASE
Pressing this key decreases the value set

INCREASE
Pressing this key increases the value set

3 - LED GREEN

ON = Indicates the presence of electrical voltage.
It switches of momentarily every time the keys are pressed.
It can be disabled by setting **PAR 3 = 0**.

4 - LED RED

OFF = Regular functioning.
ON = Boiler anomaly signalled.
Flashing when the control panel buttons are pressed inside the PARAMETERS SECTION.

Fig. 13

3.2 ACCESS TO INSTALLER'S PARAMETERS

For access to the installer's parameters, press simultaneously the keys of boiler panel (and) for 5 seconds.
The red LED flashes and the display shows:

The parameters can be scrolled with or .
To enter the parameter press **–** or **+** .
The value set **flashes**, the display shows:

Proceed as follows to change the set value:
- set the new value using **–** or **+** .
- confirm the set value using or .

Press ⏻ to exit the parameters section. The display is shown automatically after 5 minutes. The parameters section contains the alarms log, info and meters (display only).

3.2.1 Replacing the board or RESETTING parameters

If the electronic board is replaced or reset, it is necessary to configure PAR 01 and PAR 02 by associating the following values to each type of boiler to be able to restart the boiler:

GAS	MODELS	PAR 1
METHANE (G20)	12 T	**01**
	20 T - 25	**02**
	30	**03**
	35	**04**
PROPANE (G31)	12 T	**05**
	20 T - 25	**06**
	30	**07**
	35	**08**
-	-	**-**
	-	**-**
	-	**-**
	-	**20**

BOILER	PAR 2
25-30-35	**01**
25-30-35 combined with sun-panel system	**02**
with storage tank	**03**
12 T - 20 T	**04**

NOTE: the boiler panel has a label with the values that have to be set for PAR 01 and PAR 02 (fig. 19).

PARAMETERS INSTALLER

FAST CONFIGURATION

PAR	DESCRIPTION	RANGE	UNIT OF MEASUREMENT	INC/DEC UNIT	DEFAULT SETTING
01	Combustion configuration	– = ND 1 ... 20	=	=	"–"
02	Hydraulic configuration	– = ND 1 ... 12	=	=	"–"
03	Disabling of voltage presence LED	0 = Disabled 1 = Enabled	=	=	01
04	Correction of external probe values	-5 ... 05	°C	1	00
05	Timer block of the keys	– = Disabled 1 ... 99	Min.	1	15
09	Fan rpm Step ignition	00 81	rpm x 100	**0,1** from 0,1 to 19,9 **1** from 20 to 81	00

D.H.W. - HEATING

PAR	DESCRIPTION	RANGE	UNIT OF MEASUREMENT	INC/DEC UNIT	DEFAULT SETTING
10	Boiler antifreeze	0 ... 10	°C	1	03
11	External sensor antifreeze	– = Disabled - 9 ... 05	°C	1	- 2
12	Climatic curve setting	03 ... 40	=	1	20
13	Minimum temperature heating	20 ... PAR 14	°C	1	20
14	Maximum temperature heating	PAR 13 ... 80	°C	1	80
15	Maximum power heating	30 ... 99	%	1	99
16	Post-circulation time	0 ... 99	10 sec.	1	03
17	Pump heating activation delay	0 ... 99	10 sec.	1	01
18	Re-ignition delay	0 ... 10	Min.	1	03
19	Flow meter modulation saturation band	0 ... 99	%	1	30
29	Anti-legionella (only D.H.W. tank)	0 = Disabled 1 = Enabled	=	=	0

PARAMETERS RE-SET

PAR	DESCRIPTION	RANGE	UNIT OF MEASUREMENT	INC/DEC UNIT	DEFAULT SETTING
49 *	Reset default parameters (PAR 01 - PAR 02 equal "–")	– , 1	=	=	=

* ***If the current setting is difficult to understand or anomalous behaviour or if it is difficult to understand the boiler, it is advised to restore the initial parameter values by setting PAR 49 = 1 and PAR 1 and PAR 2 as specified in point 3.2.1.***

ALARMS (visualization)

PAR	DESCRIPTION	RANGE	UNIT OF MEASUREMENT	INC/DEC UNIT	DEFAULT SETTING
A0	Last code anomaly appearance	=	=	=	=
A1	Code anomaly previously appearance	=	=	=	=
A2	Code anomaly previously appearance	=	=	=	=
A3	Code anomaly previously appearance	=	=	=	=
A4	Code anomaly previously appearance	=	=	=	=
A5	Code anomaly previously appearance	=	=	=	=
A6	Code anomaly previously appearance	=	=	=	=
A7	Code anomaly previously appearance	=	=	=	=
A8	Code anomaly previously appearance	=	=	=	=
A9	Code anomaly previously appearance	=	=	=	=

INFO (visualization)

PAR	DESCRIPTION	RANGE	UNIT OF MEASUREMENT	INC/DEC UNIT	DEFAULT SETTING
i0	External sensor temperature	-9 ... 99	°C	1	=
i1	C.H. 1 sensor temperature	-9 ... 99	°C	1	=
i2	C.H. 2 sensor temperature	-9 ... 99	°C	1	=
i3	Fumes sensor temperature	-9 ... 99	°C	1	=
i4	Auxiliary sensor AUX temperature	-9 ... 99	°C	1	=
i5	Set of effective heating temperature	PAR 13 ... PAR 14	°C	1	=
i6	Level ionization flame	00 ... 99	%	1	=
i7	Number of fan revolutions	00 ... 99	100 rpm	1	=
i8	Flow rate D.H.W. flow meter	00 ... 99	l/min	1	=

COUNTERS (visualization)

PAR	DESCRIPTION	RANGE	UNIT OF MEASUREMENT	INC/DEC UNIT	DEFAULT SETTING
c0	Number hours of operation of the burner	00 ... 99	h x 100	**0,1** from 0,0 to 9,9 **1** from 10 to 99	00
c1	Number of ignitions of the burner	00 ... 99	x 1000	**0,1** from 0,0 to 9,9 **1** from 10 to 99	00
c2	Number total of the anomalies	00 ... 99	x 1	1	00
c3	Number approached the parameters installator	00 ... 99	x 1	1	00
c4	Number approached the parameters OEM	00 ... 99	x 1	1	00

3.3 EXTERNAL SENSOR

If there is an external sensor, the heating settings SET can be taken from the climatic curves (PAR 12) according to the external temperature and, in any case, limited to with the range values described in point 3.2 (parameters PAR 13 and PAR 14).
The climatic curve to be set can be selected from a value of 3 and 40 (at step 1).
Increasing the steepness of the curves of fig. 14 will increase the output temperature as the external temperature decreases.

3.5 CARD FUNCTIONING

The electronic card has the following functions:

- Antifreeze protection of the heating circuits.
- Ignition and flame detection system.
- Control panel setting for the power and the gas for boiler functioning.
- Anti-block for the pump which is fed for a few seconds (10") after 48 hours of inactivity.
- Chimney sweep function which can be activated from the control panel.
- Temperature which can be shifted with the external sensor connected.
- Automatic regulation of the ignition power and maximum heating.
  Adjustments are managed automatically by the electronic card to guarantee maximum flexibility in use of the system.
- Interface with the following electronic systems: remote control CR 73 or CR 63 combined with expansion card kit code 8092240.

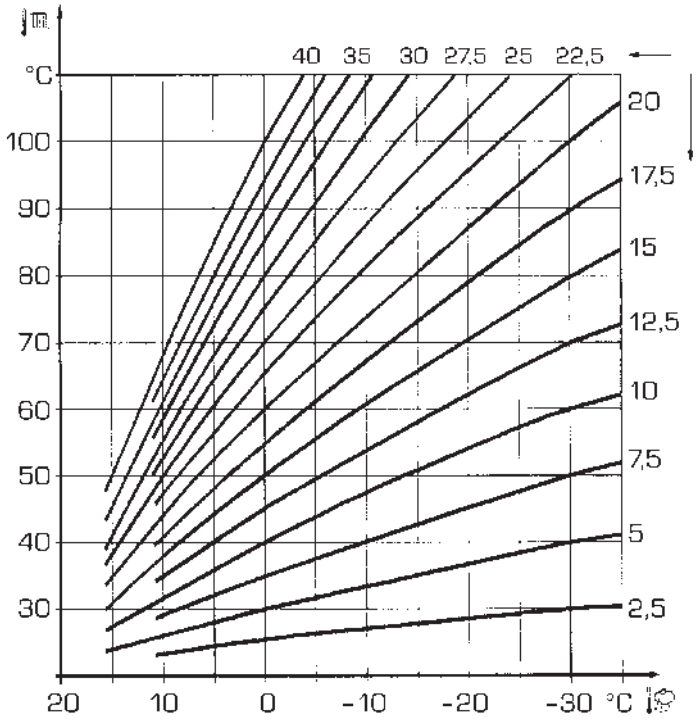

ATTENTION: curves are calculated at an ambient temperature of 20°C. Using the key on the control panel, the user can change the set ambient by ± 5°C for which the curve is calculated.

Fig. 14

3.6 TEMPERATURE DETECTION SENSOR

Table 4 shows the resistance values of the heating, D.H.W. and fumes sensor.

If the heating sensor (SM) and fumes sensor (SF) is faulty or open circuit, the boiler will not function on either heating or D.H.W.

If the D.H.W. sensor (SB) is faulty or open circuit, the boiler set in winter mode will only work with heating function; if set in summer mode, D.H.W. function will be enabled only.

TABLE 4 (SM - SF - SB sensors)

Temperature (°C)	Resistance (Ω)
20	12.090
30	8.313
40	5.828
50	4.161
60	3.021
70	2.229
80	1.669

3.6 ELECTRONIC IGNITION

Ignition and flame detection is controlled by a single electrode on the burner which guarantees reaction in the case of accidental extinction or lack of gas within one second.

3.6.1 Functioning cycle

Burner ignition occurs within max. 10 seconds after the opening of the gas valve.
Ignition failure with consequent activation of block can be due to:

- **Lack of gas**
  The ignition electrode persists in discharging for max. 10 seconds. If the burner does not ignite, the anomaly is signalled.
  This can happen the first time the boiler is switched on after a long period of inactivity due to the presence of air in the gas pipes.
  It can be caused by a closed gas tap or by a broken valve coil (the interruption does not allow for opening).
- **The electrode does not discharge.**
  In the boiler, only the opening of the gas to the burner can be detected. After 10 seconds the anomaly is signalled. It can be caused by an interruption in the electrode wire or if it is incorrectly anchored to the connection points. Or the electrode may be earthed or strongly worn: it must be replaced.
  Or the electronic card may be defective.

In the case of a sudden lack of voltage, the burner will immediately switch off. When voltage returns, the boiler will automatically start up again.

3.7 WATER PRESSURE VALVE

The water pressure valve (C fig. 15/a) intervenes, blocking burner functioning, if it detects that there is insufficient pressure

in the boiler (< 0,6 bar).
To restore burner functioning, to bring back the pressure of the boiler at values comprise between 1 - 1,2 bar.

3.8 HEAD AVAILABLE TO SYSTEM

Residual head for the heating system is shown as a function of rate of flow in the graph in fig. 15. To obtain the maximum head available to the system, turn off the by-pass by turning the union to the vertical position (fig. 15/a).

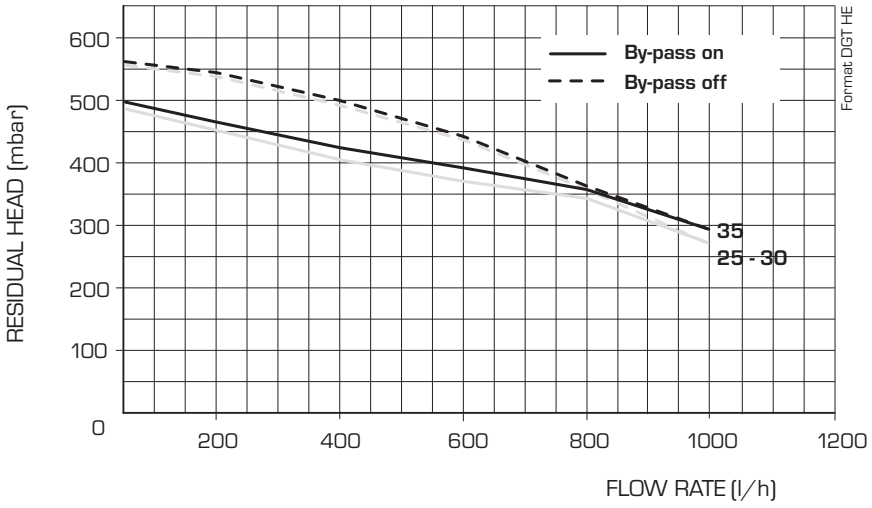

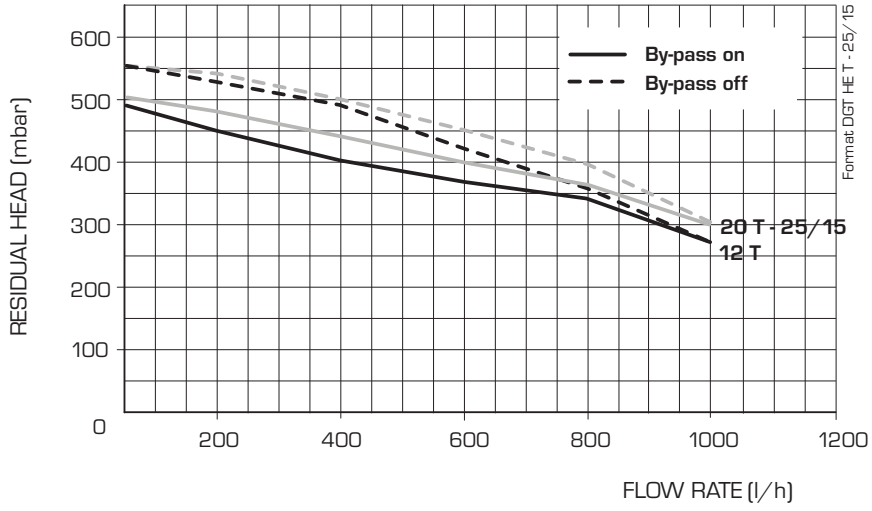

Fig. 15

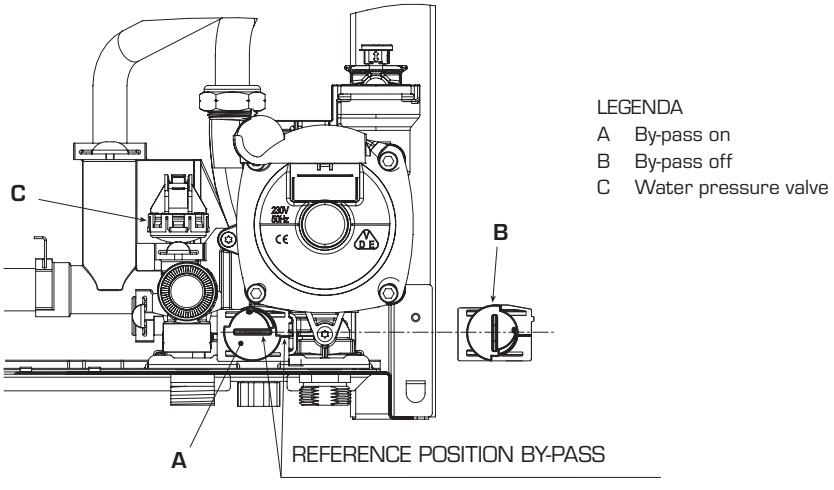

Fig. 15/a

4 USE AND MAINTENANCE

4.1 GAS VALVE (fig. 17)

The boiler is supplied as standard with a gas valve, model SIT 848 SIGMA.

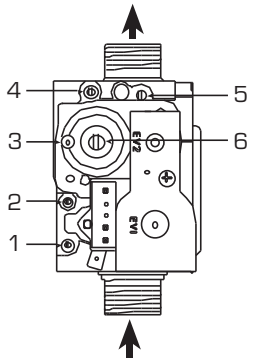

KEY
1 Upstream pressure intake
2 Intermediate pressure intake
3 Air signal inlet (VENT)
4 Downstream pressure intake
5 Capacity step
6 OFF-SET

Fig. 17

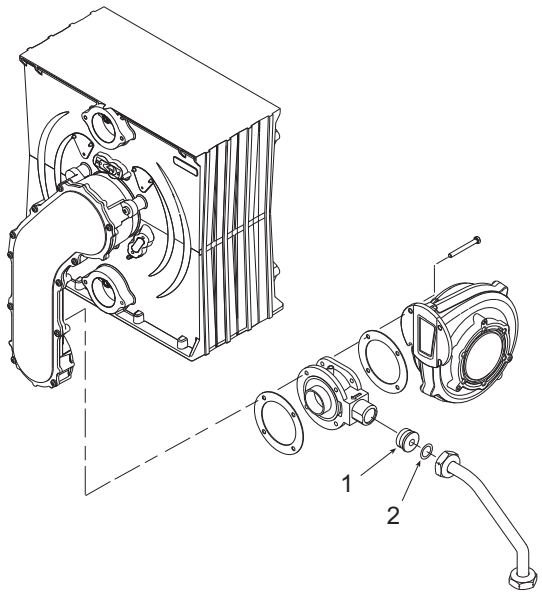

Fig. 18

4.3 GAS CONVERSION (fig. 18)

This operation must be performed by authorised personnel using original Sime components.
To convert from natural gas to LPG or vice versa, perform the following operations
- Close the gas cock.
- Replace the nozzle (1) and the gasket (2) using those supplied in the conversion kit.
- Test all the gas connection using soapy water or special products. Do not use open flames.
- Apply the nameplate with the new gas flow layout.
- Calibrate the maximum and minimum pressures of the gas valve following the instructions provided in paragraph 4.3.2.

4.3.1 New fuel configuration

Access the parameters section by pressing the control panel keys (and) at the same time for 5 seconds.
The red LED flashes and the display shows:

Scroll the parameters using or .
To enter the fuel configuration paramater PAR 01, use − or + .
The set value **flashes** and if the boiler in question is a **20 T** with methane, the display shows:

For the **20 T** boiler to function with LPG, press + until **06** appears.
Confirm this value using or .
Exit the parameters section by pressing ⏻ .

The table below gives the values to set when the supply gas is changed:

GAS	MODELS	PAR 1
METHANE (G20)	12 T	**01**
	20 T - 25	**02**
	30	**03**
	35	**04**
PROPANE (G31)	12 T	**05**
	20 T - 25	**06**
	30	**07**
	35	**08**
-	-	**-**
	-	**-**
	-	**-**
	-	**20**

4.3.2 Calibrating the gas valve pressures

Measure the CO_2 values with a combustion analyzer.

Sequence of operations:

1) Press buttons − and + at the same time for 5 seconds.
(Lo) will appear on the display and the boiler will work at minimum power.

2) Press button + to raise the boiler to maximum power (Hi).

3) Search for CO_2 values at max power stated below by acting on the capacity step (5 fig. 17):

MAX power		
Boiler model	**CO_2 (Methane)**	**CO_2 (Propane)**
12	9,2 ±0,3	10,0 ±0,3
20-25-30-35	9,0 ±0,3	10,0 ±0,3

4) Press button − to bring the boiler to minimum power (Lo).

5) Search for CO_2 values at min power stated below by acting on the OFF-SET adjustment screw (6 fig. 17):

MIN power		
Boiler model	**CO_2 (Methane)**	**CO_2 (Propane)**
12	9,2 ±0,3	10,0 ±0,3
20-25-30-35	9,0 ±0,3	10,0 ±0,3

6) Press buttons − and + several times to verify the pressures; if necessary, make the appropriate corrections.

7) Press button ⏻ to exit the function.

4.4 DISASSEMBLING THE SHELL

To simplify maintenance operations on the boiler, it is also possible to completely remove the shell, as shown in figure 19.
Turn the control panel to move it forward and be able to access the internal components of the boiler.

4.5 MAINTENANCE

To guarantee functioning and efficiency of the appliance, in respect of the legal provisions in force, it must be regularly checked; the frequency of the checks depends on the type of appliance and the installation

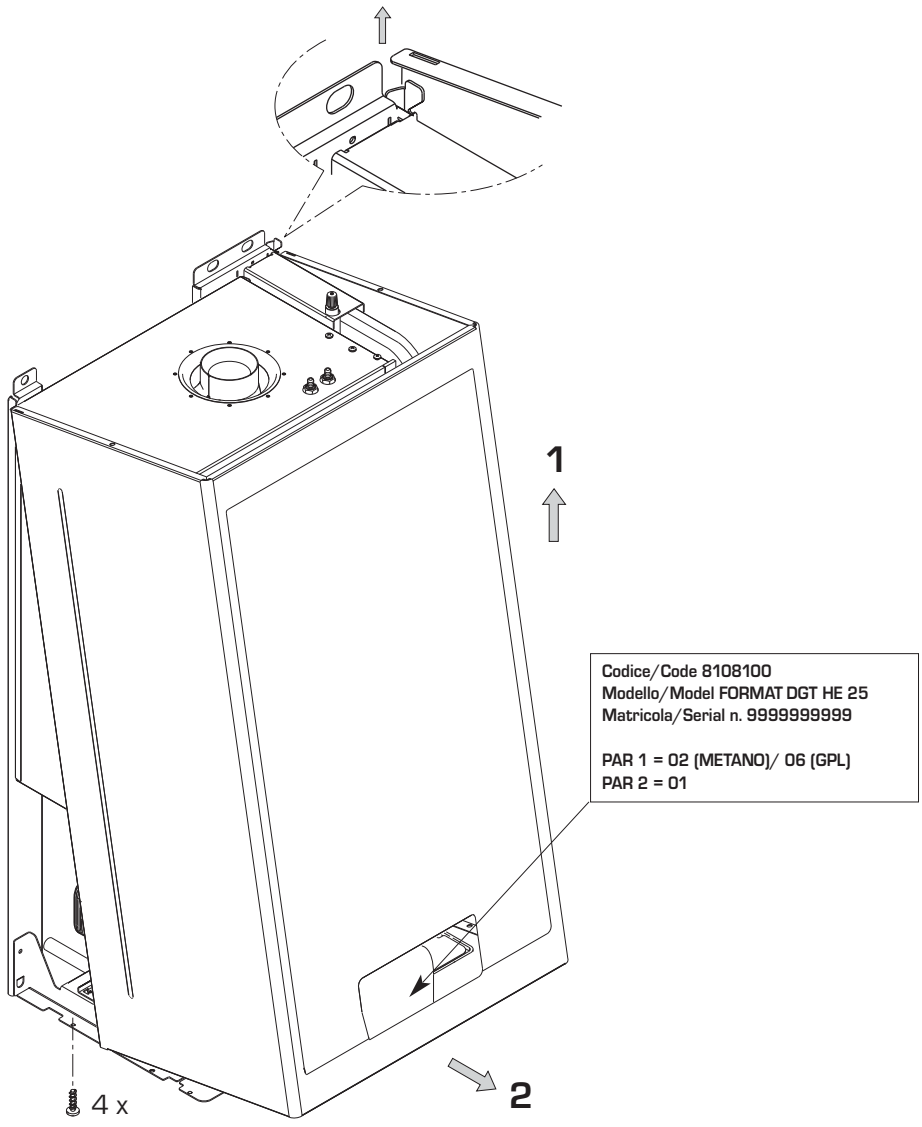

Fig. 19

and usage conditions.
In any case, it should be inspected at least once a year by a qualified technician.
During maintenance operations, it is important to verify that the drip-plate with drain trap contains water (this check is particularly important if the generator has not been used for extended periods of time).
If necessary, the drip plate can be filled using the tap provided (fig. 20).

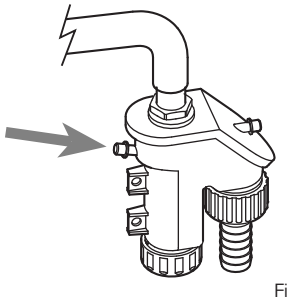

Fig. 20

4.5.1 Chimney sweep function

To check boiler combustion, press at the same time the installer's key (**–** e **+**) for a few seconds.
The chimney sweep function will switch on and will continue for 15 minutes. During the 15 minutes functioning of chimney sweep function, pressing the keys (**–** and **+**) take the boiler respective at maximum (Hi) and at minimum (Lo) power. From that moment, the boiler will start working in heating mode at maximum power, with cut off at 80°C and re-ignition at 70°C.
Before activating the chimney sweep function make sure that the radiator valves or eventual zone valves are open.
The test can also be carried out with the boiler working in D.H.W. mode.
For this, after activating the chimney sweep function, open one or more hot water faucets.
Under these conditions, the boiler will function at maximum power with the D.H.W. kept at between 60°C and 50°C.
During the test, the hot water faucets must remain open.
For exit to the chimney sweep function press the key ⏻ of the control panel.

The chimney sweep function will automatically switch off after 15 minutes from the activation.

4.5.2 Clean heating water filter (fig. 21)

To clean the filter (9 fig. 6), turn off the

system flow/return shut-off taps, turn control board power off, remove the casing and empty the boiler through the relevant drain. Place a collecting vessel under the filter.
Use pliers to remove the filter from the relevant inserted tongue and clean it removing impurities and lime scale deposits.

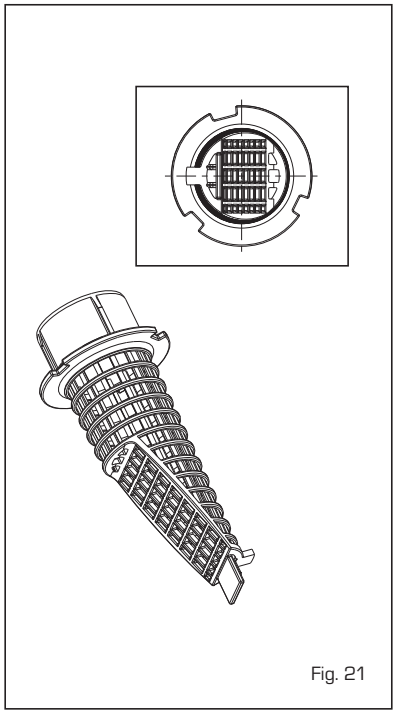

Fig. 21

4.6 FUNCTIONING ANOMALIES

When there is a functioning anomaly, an alarm appears on the display **and switch on the red led.**
Descriptions of the anomalies with relative alarms and solutions are given below:

- **FUMES DISCHARGE ANOMALY ALARM 01**
  The fumes thermostat has intervened. If the condition causing the problem persists for two minutes, the boiler stops for an enforced period of thirty minutes.
  At the end of this period, the boiler reattempts ignition.

- **LOW WATER PRESSURE ANOMALY ALARM 02** (fig. 22/a)
  If the pressure detected by the water pressure valve is lower than 0.5 bar, the boiler stops and the display shows the alarm "AL 02".
  Bring the pressure back to normal by means by acting on the telescopic loading knob.
  Lower the knob and turn it anti-clockwise to open until the pressure indicated on the hydrometer reaches 1 - 1.2 bar.
  WHEN FILLING HAS BEEN COMPLETED, CLOSE THE KNOB BY TURNING IT CLOCKWISE.
  If the load procedure has to be repeated several times, it is advisable to check that the seal of the heating circuit is intact (check that there are no leaks).

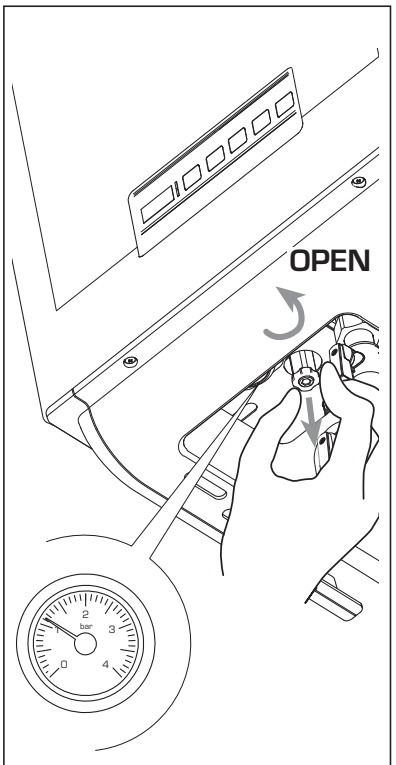

Fig. 22/a

- **HEATING SENSOR ANOMALY ALARM 05**
  When C.H. sensor (SM) are open or short circuited, the boiler will not function and the display will show the alarm "AL 05".

- **FLAME BLOCK ALARM 06** (fig. 22/b)
  If the flame control has not detected the presence of the flame after a complete ignition sequence, or for any other reason the card cannot "see" the flame, the boiler will stop and the display will show the alarm "AL 06".
  Press the key ⏻ of the controls to start up the boiler again.

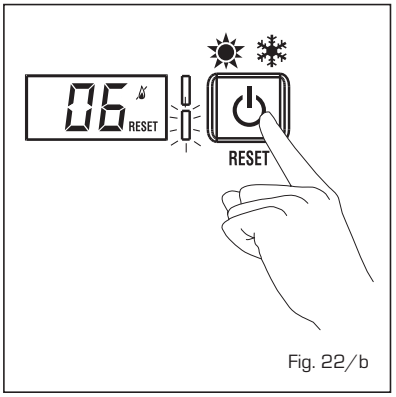

Fig. 22/b

- **SAFETY THERMOSTAT ANOMALY ALARM 07** (fig. 22/c)
  Opening the connection line with the security thermostat determines boiler shutdown. The display shows AL 07 and the green led is turned on. If this condition is not restored in more than one minute, the boiler will stop, the display will still show anomaly AL 07 and the red led will turn on.
  Press the key ⏻ of the controls to start up the boiler again.

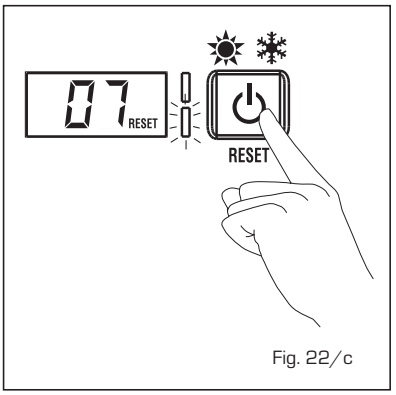

Fig. 22/c

- **PARASITE FLAME ANOMALY ALARM 08**
  If the flame control section recognises the presence of flames also in phases when they should not be present, it means there is a breakdown in the flame detection circuit; the boiler will stop and the display will show anomaly "AL 08".

- **AUXILIARY SENSOR ANOMALY ALARM 10**
  ONLY FOR BOILER WITH SOLAR PLANT COUPLING (**PAR 2 = 2**):
  D.H.W. inlet probe anomaly. When the probe is open or short circuited the boiler looses the solar function and the display shows anomaly AL 10.

- **FUMES PROBE INTERVENTION "AL 13" (fig. 22/d)**
  If the fumes probe intervenes, the boiler will stop and the display will show anomaly AL 13.
  Press the key ⏻ of the controls to start up the boiler again.

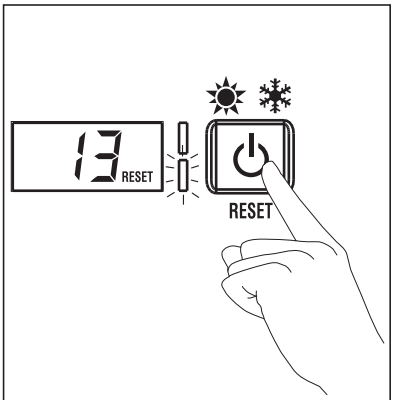

Fig. 22/d

- **FUMES PROBE ANOMALY "AL 14"**
  When the fumes probe is opened or short-circuited, the boiler stops and the displays shows anomaly AL 14.

- **FAN ANOMALY "AL 15"**
  Fan revolutions are not within the pre-established speed range. If the anomaly activation condition lasts for over two minutes, the boiler will forcedly stop for thirty minutes and the display will show anomaly AL 15. After this forced time, the boiler will start working again.

- **HEATING PROBE POSITIONING ANOMALY SM "AL 16"** (fig. 22/e)
  If the probe does not detect a temperature increase after burner ignition, the burner switches off after 10 seconds, the display shows anomaly AL 16 eand the4 green LED stays on.
  If the anomaly occurs three times within 24h lthe boiler blocks, the display continues to show anomaly AL 16 and the red LED switches on.
  Press ⏻ on the control panel to re-start the boiler.

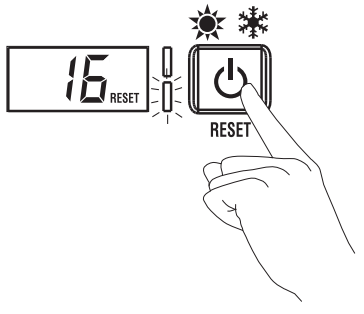

Fig. 22/e

- **CONDENSATE LEVEL ANOMALY "AL 18"**
  Activation is determined by the closing of the condensate level sensor normally open contact. The boiler will forcedly stop for ten minutes and the display will show anomaly AL 18. After this forced time, the boiler will start working again.

WARNINGS

- *In case of fault and/or incorrect equipment operation, deactivate it, without making any repairs or taking any direct action. Apply only to qualified technical personnel.*
- *Boiler installation and any other assistance and/or maintenance activity must be carried out by qualified personnel persuant to Standard CEI 64-8. Under no circumstances, the devices sealed by the manufacturer can be tampered with.*
- *It is absolutely prohibited to block the intake grilles and the aeration opening of the room where the equipment is installed.*
- *The manufacturer shall not be held liable for any damage caused by improper use of the appliance.*
- *This appliance is not intended for use by persons (including children) with reduced physical, sensory or mental capabilities, or lack of experience and knowledge, unless they have been given supervision or instruction concerning use of the appliance by a person responsible for their safety. Children should be supervised to ensure that they do not play with the appliance.*

LIGHTING AND OPERATION

KEYS LOCK: if the device is not used, the keys will be locked 15 minutes after the last setting was made (PAR 5 by default) and the display lighting will turn off.
To set one of the operating modes, press any of the keys for more than two seconds (the display will indicate one to four segments progressively before unlocking the controls).

BOILER IGNITION (fig. 25)

The first ignition of the boiler must be carried out by qualified technical personnel.
Successively, if it is necessary to start up the boiler again, adhere strictly to the following instructions: open the gas tap to allow the flow of the fuel.
Move the main switch of the system to "ON". After a stop, wait for about 30 seconds before restoring functioning conditions do that the boiler can perform the control sequence.
If the green led is on, this indicates the presence of voltage.

Winter

Press the key ⏻ of the controls to activate the winter mode functioning (heating and D.H.W.). The display will be as shown in the figure.

Summer

Press the key ⏻ of the controls to activate the summer mode functioning (only the production D.H.W.). The display will be as shown in the figure.

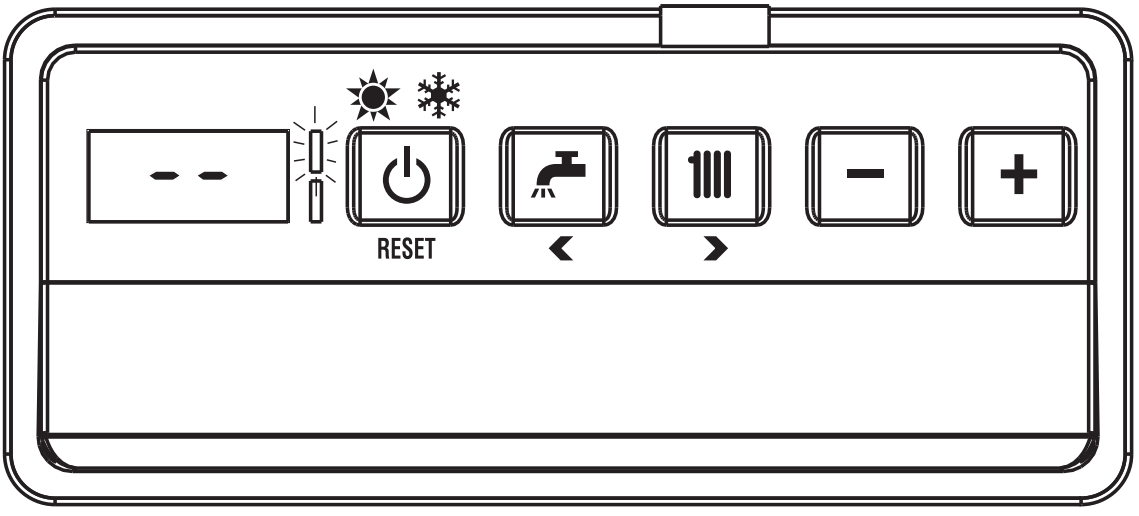

ATTENTION: for set up modality of function more adapted to graze the keys simply. When the boiler receives the commando the green led switch off for a short moment. If PAR 5 is disabled, the display remains lit.

Fig. 25

REGULATION OF THE WATER TEMPERATURE FOR HEATING (fig. 26)

To set the temperature of the water for heating, press the key of the controls . The display will be as shown in the figure. Change the values with the key (– and +). Standard visualisation will return to the display by pressing the key again, or after 60 seconds if no key is pressed.
If the water return temperature is less than about 55°C, the combustion products condense, further increasing the efficiency of thermal exchange.

Regulation of the external sensor

If an external sensor is installed, the value of the output temperature is automatically chosen by the system, which quickly adjusts the of flow temperature on the basis of the external temperature.
If you wish to change the value of the temperature, increasing or decreasing that calculated automatically by the electronic card, proceed as indicated in the preceding paragraph.
The level of various correction of a value of temperature proportional calculated. The display will be as shown in fig. 26/a.

REGULATION OF THE D.H.W. TEMPERATURE (fig. 27)

To set the desired temperature D.H.W., press the key of the controls.
The display will be as shown in the figure.
Change the values with the key (– and +).
The display will return to the standard visualisation by pressing the key again, or after 10 seconds if no key is pressed.

TO SWITCH OFF THE BOILER (fig. 28)

In the case of a short absence, press more than two second the key of the controls. The display will be as shown in figure (boiler in stand-by). In this way, leaving the electricity and the fuel supply connected, the boiler is protected from frost and from the pump becoming blocked.
If the boiler is not used for a prolonged period, it is advisable to disconnect the electricity supply, by switching off the main switch of the system, and to close the gas tap and, if low temperatures are expected, to completely empty the hydraulic circuits to avoid pipes being broken by the formation of ice in the pipes.

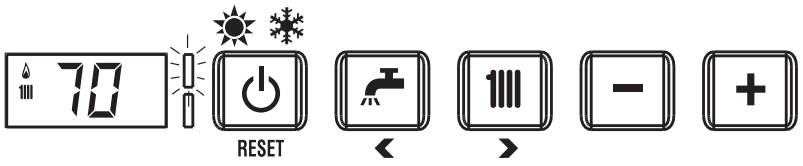

Fig. 26

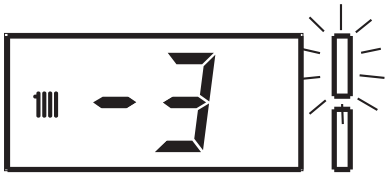

Fig. 26/a

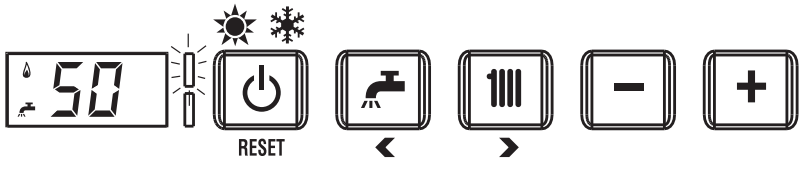

Fig. 27

Fig. 28

ANOMALIES AND SOLUTIONS

When there is a functioning anomaly, the display controls shows **and red led switch on**.
Descriptions of the anomalies with the relative alarms and solutions are given below:

- **AL 01 (fig. 29)**
  Press the key ⏻ of the controls to restart the boiler.
  If the anomaly persists, request the intervention of qualified technical personnel.

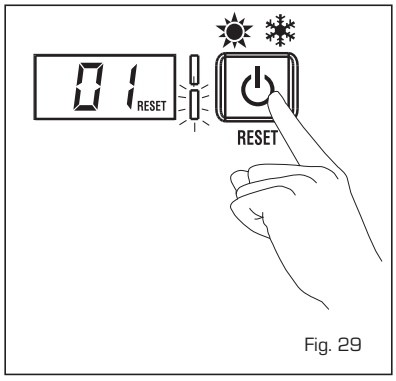

Fig. 29

- **AL 02 (fig. 29/a)**
  If the water pressure detected is lower than 0.5 bar, the boiler will stop and the display will show "AL 02".
  Bring the pressure back to normal by means by acting on the telescopic type loading knob.
  Lower the knob and turn it anti-clockwise to open until the pressure indicated by the hydrometer is between 1 and 1.2 bars.
  WHEN FILLING HAS BEEN COMPLETED CLOSE THE KNOB TURNING IT CLOCKWISE.

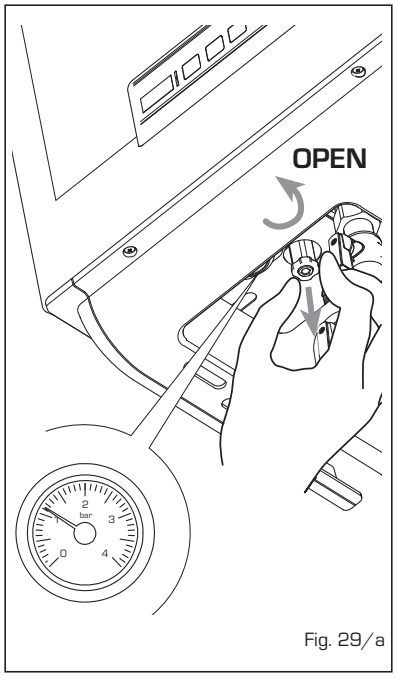

Fig. 29/a

If it is necessary to repeat the system loading procedure, it is advisable to contact qualified technical personnel to check the seal of the heating system (to check whether there are any leaks).

- **AL 05**
  Request assistance from qualified technical personnel.

- **AL 06 (fig. 29/b)**
  Press the key ⏻ of the controls to restart the boiler.
  If the anomaly persists, request assistance from qualified technical personnel.

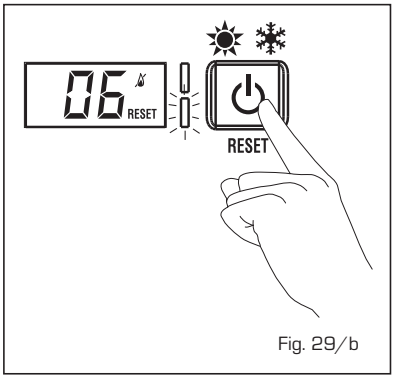

Fig. 29/b

- **AL 07 (fig. 29/c)**
  Press the key ⏻ of the controls to restart the boiler.
  If the anomaly persists, request assistance from qualified technical personnel.

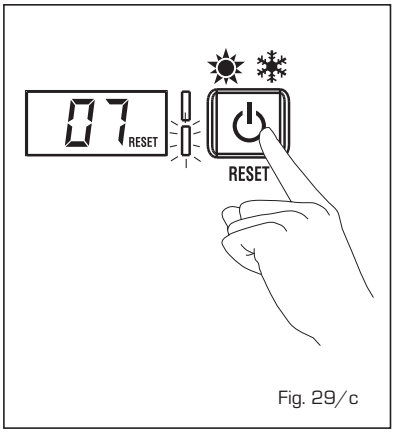

Fig. 29/c

- **AL 08**
  Request assistance from qualified technical personnel.

- **AL 10**
  Request assistance from qualified technical personnel.

- **AL 13 (fig. 29/d)**
  Press the key ⏻ of the controls to restart the boiler.
  If the anomaly persists, request assistance from qualified technical personnel.

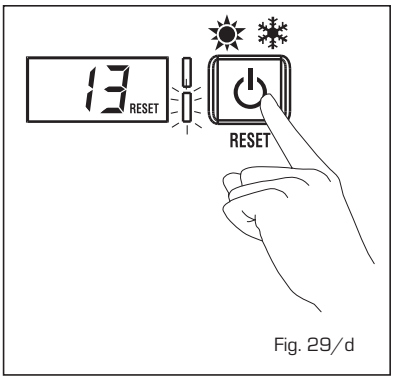

Fig. 29/d

- **AL 14**
  Request assistance from qualified technical personnel.

- **AL 15**
  Request assistance from qualified technical personnel.

- **AL 16 (fig. 29/e)**
  Press the key ⏻ of the controls to restart the boiler.
  If the anomaly persists, request assistance from qualified technical personnel.

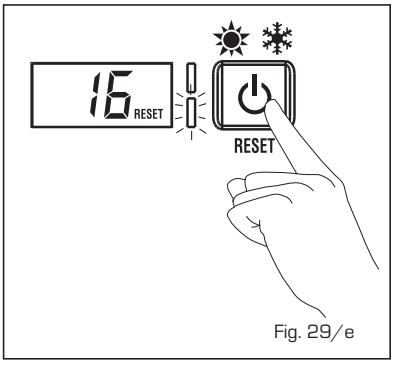

Fig. 29/e

- **AL 18**
  Request assistance from qualified technical personnel.

GAS CONVERSION

If it is necessary to change to a different type of gas, request assistance only from authorised technical personnel.

MAINTENANCE

Annual maintenance of the appliance should be planned sufficiently in advance, requesting the assistance of authorised technical personnel.
The boiler is supplied with an electric wire for the electrical power supply which, in the case of replacement, must be substituted only by another obtained from the constructor.

DICHIARAZIONE DI CONFORMITA' CALDAIE MURALI A GAS

La **FONDERIE SIME S.p.A.**, con riferimento **all'art. 5 DPR n°447 del 6/12/1991** "Regolamento di attuazione della **legge 5 marzo 1990 n°46**" ed in conformità alla **legge 6 dicembre 1971 n° 1083** "Norme per la sicurezza dell'impiego del gas combustibile", dichiara che le proprie caldaie murali a gas serie:

FORMAT - PLANET
FORMAT 25/60 OF - 25/60 BF - 30/60 BF
PLANET Low NOx*
PLANET AQUAQUICK
PLANET 25/60 BF - 30/60 BF
PLANET DEWY BF - BFT - BFR *
OPEN - OPEN.zip
OPEN DEWY.zip *
FORMAT.zip 5 - FORMAT.zip – FORMAT.zip Solar - FORMAT.zip PC
FORMAT DEWY.zip – FORMAT DEWY.zip Solar *
METROPOLIS - METROPOLIS H - PRAKTICA - METROPOLIS DGT - PRAKTICA DGT
MURELLE - MURELLE EV - FORMAT DGT
MURELLE HE - MURELLE EV HE - FORMAT DGT HE *
MURELLE 25/55 OF - 25/55 BF - 30/55 BF
MURELLE EV 25/55 OF - 25/55 BF - 30/55 BF
MURELLE HE 25/55 BF - 30/55 BF *
MURELLE EV HE 25/55 - 30/55 *

sono complete di tutti gli organi di sicurezza e di controllo previsti dalle norme vigenti in materia e rispondono, per caratteristiche tecniche e funzionali, alle prescrizioni delle norme:
UNI-CIG 7271 (aprile 1988)
UNI-CIG 9893 (dicembre 1991)
UNI EN 297 per APPARECCHI A GAS DI TIPO B AVENTI PORTATA TERMICA ≤ 70 kW
EN 483 per APPARECCHI A GAS DI TIPO C AVENTI PORTATA TERMICA ≤ 70 kW
EN 677 per APPARECCHI A GAS A CONDENSAZIONE AVENTI PORTATA TERMICA ≤ 70 kW.

La portata al sanitario delle caldaie combinate è rispondente alla norma:
UNI EN 625 per APPARECCHI AVENTI PORTATA TERMICA ≤ 70 kW

Le caldaie a gas sono inoltre conformi alla:
DIRETTIVA GAS 90/396/CEE per la conformità CE di tipo
DIRETTIVA BASSA TENSIONE 2006/95/CE
DIRETTIVA COMPATIBILITÀ ELETTROMAGNETICA 2004/108/CE
DIRETTIVA RENDIMENTI 92/42 CEE

Il sistema qualità aziendale è certificato secondo la norma **UNI EN ISO 9001: 2000**.

*Caldaie a basse emissioni inquinanti **("classe 5" rispetto alle norme europee UNI EN 297 e EN 483)**.

Legnago, 27 agosto 2009

Il Direttore Generale
ing. Aldo Gava

TAGLIARE LUNGO LA LINEA TRATTEGGIATA

Fonderie Sime S.p.A. - Via Garbo, 27 - 37045 Legnago (Vr) - Tel. 0442 631111 - Fax Servizio Tecnico 0442 631292 - www.sime.it

Rendimenti caldaie murali a gas

MODELLO	Potenza termica kW	Portata termica kW	Tipo di caldaia	Marcatura n° stelle	Rendimento utili misurati 100% - 30%	Rendimento minimo di combustione %
PLANET - FORMAT 25 OF C	23,3	25,8	BT	2	90,3 - 89,7	92,73
PLANET - FORMAT 30 OF C	28,6	31,6	BT	2	90,4 - 91,3	92,91
PLANET 25 BFT TS	25,6	27,5	BT	3	93,2 - 91,2	92,82
PLANET AQUAQUICK 25 TS - 25 PLUS	25,6	27,5	BT	3	93,2 - 91,2	92,82
PLANET AQUAQUICK 30 TS - 30 PLUS	30,4	32,5	BT	3	93,6 - 92,7	92,97
PLANET Low NOx 25 BF	23,2	25,0	ST	3	92,8 - 90,7	92,73
PLANET Low NOx 30 BF	27,9	30,0	ST	3	93,1 - 92,4	92,89
PLANET 25/60 BF	25,0	26,7	ST	3	93,5 - 92,0	92,80
PLANET 30/60 BF	29,5	31,6	ST	3	93,5 - 92,0	92,94
PLANET DEWY 25 BF - 25 BFT	24,0	24,9	CN	4	96,6 - 106,2	92,76
PLANET DEWY 30 BF	29,3	30,0	CN	4	97,7 - 106,6	92,93
PLANET DEWY 30 BFR	28,3	29,0	CN	4	97,7 - 106,6	92,90
PLANET DEWY 60 BFR	56,6	58,0	CN	4	97,5 - 109,8	93,51
PLANET DEWY 100 BFR	94,2	96,6	CN	4	97,5 - 109,0	93,95
PLANET DEWY 30/50 BF	29,2	30,0	CN	4	97,2 - 106,7	92,93
OPEN 25 BF TS2	23,8	25,5	BT	3	93,3 - 93,0	92,75
OPEN 30 BF TS2	30,8	33,0	BT	3	93,3 - 93,0	92,98
FORMAT 25 BF TS	25,6	27,5	BT	3	93,2 - 91,2	92,82
FORMAT 30 BF TS	30,4	32,5	BT	3	93,6 - 92,7	92,97
FORMAT 25/60 OF	23,2	25,8	BT	2	90,3 - 90,3	92,73
FORMAT 25/60 BF	25,0	26,7	ST	3	93,5 - 92,0	92,80
FORMAT 30/60 BF	29,5	31,6	ST	3	93,5 - 92,0	92,94
FORMAT.zip 5 25 OF - 25 OF ES	23,5	25,8	BT	2	91,2 - 91,1	92,74
FORMAT.zip 5 25 BF TS	23,7	25,5	BT	3	93,1 - 91,2	92,75
FORMAT.zip 30 OF S - 30 OF ES	28,8	31,6	BT	2	91,1 - 90,0	92,92
FORMAT.zip 25 BF TS - 25 BF TSA - 25 Solar	23,7	25,5	BT	3	93,1 - 91,2	92,75
FORMAT.zip 30 BF TS - 30 Solar	28,0	30,0	BT	3	93,6 - 92,8	92,89
FORMAT.zip 35 BF TS	32,4	34,8	BT	3	93,2 - 92,5	93,02
FORMAT.zip 25 PC	24,7	25,5	CN	4	96,9 - 103,0	92,79
FORMAT.zip 30 PC	29,1	30,0	CN	4	96,9 - 102,7	92,93
FORMAT.zip 35 PC	33,5	34,8	CN	4	96,3 - 101,5	93,05
OPEN.zip 25 BF TS	23,7	25,5	BT	3	93,1 - 91,2	92,75
OPEN.zip 30 BF TS	28,0	30,0	BT	3	93,6 - 92,8	92,89
OPEN.zip 25 BF TS2 - 6 25 BF	23,8	25,5	BT	3	93,3 - 93,0	92,75
OPEN.zip 30 BF TS2 - 6 30 BF	30,8	33,0	BT	3	93,3 - 93,0	92,98
FORMAT DEWY.zip 25 BF - 25 Solar	22,7	23,3	CN	4	97,5 - 109,2	92,71
FORMAT DEWY.zip 30 BF - 30 Solar	27,3	27,9	CN	4	97,9 - 110,4	92,87
OPEN DEWY.zip 25 BF - 25/40	24,5	25,0	CN	4	99,0 - 109,0	92,78
METROPOLIS - PRAKTICA 25 OF	23,7	25,8	BT	2	91,9 - 91,0	92,75
METROPOLIS - PRAKTICA 30 OF	28,8	31,6	BT	2	91,1 - 91,0	92,92
METROPOLIS - PRAKTICA 25 BF	23,8	25,5	BT	3	93,5 - 93,1	92,75
METROPOLIS - PRAKTICA 30 BF	30,8	33,0	BT	3	93,5 - 93,3	92,98
METROPOLIS DGT - PRAKTICA DGT 25 OF	22,8	25,0	BT	2	91,2 - 89,8	92,72
METROPOLIS DGT - PRAKTICA DGT 25 BF	23,7	25,5	BT	3	93,0 - 91,0	92,75
METROPOLIS DGT - PRAKTICA DGT 30 BF	28,0	30,0	BT	3	93,3 - 91,0	92,89
FORMAT DGT HE 25	19,5	20,0	CN	4	97,5 - 107,5	92,58
FORMAT DGT HE 30	24,6	25,0	CN	4	98,4 - 107,9	92,78
FORMAT DGT HE 35	29,4	30,0	CN	4	98,0 - 109,2	92,94
FORMAT DGT HE 12 T	11,0	11,5	CN	4	95,7 - 105,5	92,08
FORMAT DGT HE 20 T	19,5	20,0	CN	4	97,5 - 107,5	92,58
FORMAT DGT HE 25/15	19,5	20,0	CN	4	97,5 - 107,5	92,58
FORMAT DGT 25 OF	22,8	25,0	BT	2	91,3 - 90,1	93,70
FORMAT DGT 25 BF	23,6	25,5	BT	3	93,0 - 90,5	94,00
FORMAT DGT 30 BF	27,8	30,0	BT	3	93,0 - 91,1	93,60
MURELLE 25 OFT - 25 OF - 25/55 OF - EV 25 OFT - EV 25 OF - EV 25/55 OF	23,0	25,5	BT	2	90,0 - 89,5	92,72
MURELLE 30 OF - EV 30 OF	27,0	30,0	BT	2	90,0 - 89,5	92,86
MURELLE 20 BFT - EV 20 BFT	19,8	21,3	BT	3	93,0 - 92,0	92,59
MURELLE 25 BFT - 25 BF - EV 25 BFT - EV 25 BF	23,7	25,5	BT	3	93,0 - 92,0	92,75
MURELLE 30 BF - EV 30 BF	28,0	30,0	BT	3	93,3 - 92,0	92,89
MURELLE 35 BF - EV 35 BF	32,4	34,8	BT	3	93,1 - 92,0	93,02
MURELLE 25/55 BF - EV 25/55 BF	25,1	27,0	BT	3	93,0 - 91,5	92,80
MURELLE 30/55 BF - EV 30/55 BF	29,8	32,0	BT	3	93,0 - 91,5	92,95
MURELLE HE 12 BFT - EV HE 12 T	11,7	12,0	CN	4	97,5 - 107,0	92,14
MURELLE HE 20 BFT - EV HE 20 T	19,0	19,5	CN	4	97,5 - 107.0	92,56
MURELLE HE 25 BFT - 25 BF - 25/55 BF - EV HE 25 T - EV HE 25 - EV HE 25/55	23,9	24,5	CN	4	97,5 - 107,0	92,76
MURELLE HE 30 BFT - 30 BF - 30/55 BF - EV HE 30 T - EV HE 30 - EV HE 30/55	28,9	29,5	CN	4	98,0 - 107,0	92,92
MURELLE HE 35 BFT - 35 BF - BU 35 BFT - BU 35 BF - EV HE 35 T - EV HE 35	34,1	34,8	CN	4	98,0 - 107,0	93,07

NOTA: I rendimenti utili misurati sono riferiti ai tipi di caldaia (ST= standard, BT= bassa temperatura, CN= condensazione) richiesti dal DPR 660.

Il rendimento minimo di combustione in opera è quello richiesto dal DPR 311.

Cod. 6274278 - 09/09 - Documentation Dpt.

Fonderie Sime S.p.A - Via Garbo, 27 - 37045 Legnago (Vr)
Tel. + 39 0442 631111 - Fax +39 0442 631292 - www.sime.it