FAIRWIND ON-OFF SERIES

Service Manual 2014

12FSEU-A-1405

CONTENTS

1. Precaution **3**
1.1 Safety Precaution 3
1.2 Warning 3
2. Function **7**
3. Dimension **9**
3.1 Indoor Unit 9
3.2 Outdoor Unit 14
4. Refrigerant Cycle Diagram **16**
5. Wiring Diagram **18**
5.1 Indoor Unit 18
5.2 Outdoor Unit 28
6 Installation Details **40**
6.1 Wrench torque sheet for installation 40
6.2 Connecting the cables 40
6.3 Pipe length and the elevation 41
6.4 Installation for the first time 44
6.5 Adding the refrigerant after running the system for many years 48
6.6 Re-installation while the indoor unit need to be repaired 49
6.7 Re-installation while the outdoor unit need to be repaired 51
7. Operation Characteristics **54**
8. Electronic function **55**
8.1 Abbreviation 55
8.2 Display function 55
8.3 Main Protection 56
8.4 Operation Modes and Functions 57
9. Troubleshooting **73**
9.1 Indoor Unit Error Display 73
9.2 Diagnosis and Solution 74

1. Precaution

1.1 Safety Precaution

- **To prevent injury to the user or other people and property damage, the following instructions must be followed.**
- **Incorrect operation due to ignoring instruction will cause harm or damage.**
- **Before service the unit, be sure to read this service manual at first.**

1.2 Warning

➢ Installation

- **Do not use a defective or underrated circuit breaker. Use this appliance on a dedicated circuit.**

There is risk of fire or electric shock.

- **For electrical work, contact the dealer, seller, a qualified electrician, or an authorized service center.**

Do not disassemble or repair the product, there is risk of fire or electric shock.

- **Always ground the product.**

There is risk of fire or electric shock.

- **Install the panel and the cover of control box securely.**

There is risk of fire of electric shock.

- **Always install a dedicated circuit and breaker.**

Improper wiring or installation may cause fore or electric shock.

- **Use the correctly rated breaker of fuse.**

There is risk of fire or electric shock.

- **Do not modify or extend the power cable.**

There is risk of fire or electric shock.

- **Do not install, remove, or reinstall the unit by yourself (customer).**

There is risk of fire, electric shock, explosion, or injury.

- **Be caution when unpacking and installing the product.**

Sharp edges could cause injury, be especially careful of the case edges and the fins on the

condenser and evaporator.

- **For installation, always contact the dealer or an authorized service center.**
- **Do not install the product on a defective installation stand.**
- **Be sure the installation area does not deteriorate with age.**

If the base collapses, the air conditioner could fall with it, causing property damage, product failure, and personal injury.

- **Do not let the air conditioner run for a long time when the humidity is very high and a door or a window is left open.**
- **Take care to ensure that power cable could not be pulled out or damaged during operation.**

There is risk of fire or electric shock.

- **Do not place anything on the power cable.**

There is risk of fire or electric shock.

- **Do not plug or unplug the power supply plug during operation.**

There is risk of fire or electric shock.

- **Do not touch (operation) the product with wet hands.**
- **Do not place a heater or other appliance near the power cable.**

There is risk of fire and electric shock.

- **Do not allow water to run into electrical parts.**

It may cause fire, failure of the product, or electric shock.

- **Do not store or use flammable gas or combustible near the product.**

There is risk of fire or failure of product.

- **Do not use the product in a tightly closed space for a long time.**

Oxygen deficiency could occur.

- **When flammable gas leaks, turn off the gas and open a window for ventilation before turn the product on.**
- **If strange sounds or smoke comes from product, turn the breaker off or disconnect the power supply cable.**

There is risk of electric shock or fire.

- **Stop operation and close the window in storm or hurricane. If possible, remove the product from the window before the hurricane arrives.**

There is risk of property damage, failure of product, or electric shock.

- **Do not open the inlet grill of the product during operation. (Do not touch the electrostatic filter, if the unit is so equipped.)**

There is risk of physical injury, electric shock, or product failure.

- **When the product is soaked, contact an authorized service center.**

There is risk of fire or electric shock.

- **Be caution that water could not enter the product.**

There is risk of fire, electric shock, or product damage.

- **Ventilate the product from time to time when operating it together with a stove etc.**

There is risk of fire or electric shock.

- **Turn the main power off when cleaning or maintaining the product.**

There is risk of electric shock.

- **When the product is not be used for a long time, disconnect the power supply plug or turn off the breaker.**

There is risk of product damage or failure, or unintended operation.

- **Take care to ensure that nobody could step on or fall onto the outdoor unit.**

This could result in personal injury and product damage.

➢ CAUTION

- **Always check for gas (refrigerant) leakage after installation or repair of product.**

Low refrigerant levels may cause failure of product.

- **Install the drain hose to ensure that water is drained away properly.**

A bad connection may cause water leakage.

- **Keep level even when installing the product.**

It can avoid vibration of water leakage.

- **Do not install the product where the noise or hot air from the outdoor unit could damage the neighborhoods.**

It may cause a problem for your neighbors.

- **Use two or more people to lift and transport the product.**
- **Do not install the product where it will be exposed to sea wind (salt spray) directly.**

It may cause corrosion on the product. Corrosion, particularly on the condenser and evaporator fins,

could cause product malfunction or inefficient operation.

➢ Operational

- **Do not expose the skin directly to cool air for long time. (Do not sit in the draft).**
- **Do not use the product for special purposes, such as preserving foods, works of art etc. It is a consumer air conditioner, not a precision refrigerant system.**

There is risk of damage or loss of property.

- **Do not block the inlet or outlet of air flow.**
- **Use a soft cloth to clean. Do not use harsh detergents, solvents, etc.**

There is risk of fire, electric shock, or damage to the plastic parts of the product.

- **Do not touch the metal parts of the product when removing the air filter. They are very sharp.**
- **Do not step on or put anything on the product. (outdoor units)**
- **Always insert the filter securely. Clean the filter every two weeks or more often if necessary.**

A dirty filter reduces the efficiency of the air conditioner and could cause product malfunction or damage.

- **Do not insert hands or other objects through air inlet or outlet while the product is operated.**
- **Do not drink the water drained from the product.**
- **Use a firm stool or ladder when cleaning or maintaining the product.**

Be careful and avoid personal injury.

- **Replace the all batteries in the remote control with new ones of the same type. Do not mix old and new batteries or different types of batteries.**

There is risk of fire or explosion.

- **Do not recharge or disassemble the batteries. Do not dispose of batteries in a fire.**

They may burn of explode.

- **If the liquid from the batteries gets onto your skin or clothes, wash it well with clean water. Do not use the remote of the batteries have leaked.**

3. Function

Model			MDSF-07HRN1	MDSF-09HRN1
Indoor			MDSF-07HRN1	MDSF-09HRN1
Outdoor			MDOF-07HN1	MDOF-09HN1
Power supply		Ph-V-Hz	220-240V~ 50Hz, 1Ph	220-240V~ 50Hz, 1Ph
Cooling	Capacity	Btu/h	7500	9000
	Input	W	685	820
	Rated current	A	3,2	3,8
	EER	W/W	3,21	3,21
Heating	Capacity	Btu/h	8000	9500
	Input	W	640	770
	Rated current	A	3.0	3.6
	COP	W/W	3,66	3,62
Moisture Removal		L/h	0.8	1.0
Max. input consumption		W	1050	1200
Max. current		A	5.5	6.0
Starting current		A	16.1	21.7
Compressor	Model		ASN82V1UDZ	PA103M1C-4DZDE2
	Type		ROTARY	ROTARY
	Brand		GMCC	GMCC
	Capacity	Btu/h	6995/7029	8428/8530
	Input	W	702/735	830/860
	Rated current(RLA)	A	3.21/3.15	3.85/3.73
	Locked rotor Amp(LRA)	A	16.1	21.7
	Thermal protector		-----	B160-135-241E
	Thermal protector position		EXTERNAL	EXTERNAL
	Capacitor	uF	25	25
	Refrigerant oil/oil charge	ml	ESTEL OIL VG74/300	ESTER OIL VG74 350cc
Indoor fan motor	Model		RPG13H	RPG13H
	Brand		Welling	Welling
	Input	W	34	34
	Capacitor	uF	1.2	1.2
	Speed(Hi/Mi/Lo)	r/min	1200 / 950 / 800	1250 / 1000 / 800
Indoor coil	a.Number of rows		1/2	1/2
	b.Tube pitch(a)x row pitch(b)	mm	20x11.28	20x11.28
	c.Fin spacing	mm	1.2/1.3	1.2/1.3
	d.Fin type (code)		Hydrophilic aluminium	Hydrophilic aluminium
	e.Tube outside dia.and type	mm	Φ6,innergroove tube	Φ6,innergroove tube
	f.Coil length x height x width	mm	540x80x11.28+540x180x22.56	540x80x11.28+540x180x22.56
	g.Number of circuits		2	2
Indoor air flow (Hi/Mi/Lo)		m3/h	460/360/300	460/360/300
Indoor noise level (Hi/Mi/Lo)		dB(A)	40/33/30	41/33/29
Indoor unit	Dimension(W*D*H)	mm	715x188x250	715x188x250
	Packing (W*D*H)	mm	775x260x324	775x260x324
	Net/Gross weight	Kg	6.5 / 8.5	6.5 / 8.5
Outdoor fan motor	Model		YDK24-6F(B)	YDK24-6T(B)
	Brand		Welling	Welling
	Input	W	63	70
	Capacitor	uF	2.5	3.0
	Speed	r/min	800 / -- / --	815 / -- / --
Outdoor coil	a.Number of rows		1	1
	b.Tube pitch(a)x row pitch(b)	mm	21x13.37	21x13.37
	c.Fin spacing	mm	1.4	1.4
	d.Fin type (code)		Hydrophilic aluminium	Hydrophilic aluminium
	e.Tube outside dia.and type	mm	Φ7,innergroove tube	Φ7,innergroove tube
	f.Coil length x height x width	mm	600x504x13.37	694x504x13.37
	g.Number of circuits		2	1
Outdoor air flow		m3/h	1800	1650
Outdoor noise level		dB(A)	55	55
Outdoor unit	Dimension(W*D*H)	mm	700x240x540	700x240x540
	Packing (W*D*H)	mm	815x325x580	815x325x580
	Net/Gross weight	Kg	22 / 24	24.5 / 26.5
Refrigerant type		g	R410A/520g	R410A/590g
Design pressure		MPa	4.2/1.5	4.2/1.5
Refrigerant piping	Liquid side/ Gas side	mm(inch)	Φ6.35/Φ9.52(1/4"/3/8")	Φ6.35/Φ9.52(1/4"/3/8")
	Max. refrigerant pipe length	m	20	20
	Max. difference in level	m	8	8
Thermostat type			Remote Control	Remote Control
Operation temperature		℃	17~30	17~30
Room temperature	Indoor(cooling/ heating)	℃	17～32/0～30	17～32/0～30
	Outdoor(cooling/heating)	℃	18～43/-7～24	18～43/-7～24

Indoor			MDSF-12HRN1	MDSF-18HRN1
Outdoor			MDOF-12HN1	MDOF-18HN1
Power supply		Ph-V-Hz	220-240V~ 50Hz, 1Ph	220-240V~ 50Hz, 1Ph
Cooling	Capacity	Btu/h	11500	18000
	Input	W	1050	1640
	Rated current	A	4.5	7,6
	EER	W/W	3.21	3,21
Heating	Capacity	Btu/h	12000	19000
	Input	W	975	1540
	Rated current	A	4.2	7.1
	COP	W/W	3.61	3,62
Moisture Removal		L/h	1.1	1.8
Max. input consumption		W	1800	2200
Max. current		A	8.0	12.0
Starting current		A	25.1	31.8
Compressor	Model		PA130G1C-4FTL	PA200M2CS-4KU2
	Type		ROTARY	ROTARY
	Brand		GMCC	GMCC
	Capacity	Btu/h	12505/12556	16581
	Input	W	885/920	1605
	Rated current(RLA)	A	4.10/3.90	7.45
	Locked rotor Amp(LRA)	A	25.1	31.8
	Thermal protector		---	----
	Thermal protector position		INTERNAL	INTERNAL
	Capacitor	uF	35	45
	Refrigerant oil/oil charge	ml	ESTER OIL VG74 · 400 ml	ESTER OIL VG74 750cc
Indoor fan motor	Model		RPG20E	RPG28D
	Brand		Welling	Welling
	Input	W	45	58
	Capacitor	uF	1.5	1.5
	Speed(Hi/Mi/Lo)	r/min	1200 / 1050 / 800	1280/1100/800
Indoor coil	a.Number of rows		1/2	2
	b.Tube pitch(a)x row pitch(b)	mm	21x13.37	21x13.37
	c.Fin spacing	mm	1.2	1.2
	d.Fin type (code)		Hydrophilic aluminium	Hydrophilic aluminium
	e.Tube outside dia.and type	mm	Φ7,innergroove tube	Φ7,innergroove tube
	f.Coil length x height x width	mm	621x84x13.37+621x210x26.74	750x294x26.74
	g.Number of circuits		3	3
Indoor air flow (Hi/Mi/Lo)		m3/h	580/500/400	800/700/500
Indoor noise level (Hi/Mi/Lo)		dB(A)	40/36/30	45/40/33
Indoor unit	Dimension(W*D*H)	mm	800x188x275	940x205x275
	Packing (W*D*H)	mm	865x265x350	1015x265x350
	Net/Gross weight	Kg	8 / 10	10 / 12.5
Outdoor fan motor	Model		YDK36-6	YDK48-6H(A)
	Brand		Welling	Welling
	Input	W	70	110
	Capacitor	uF	2.5	3.0
	Speed	r/min	900 / -- / --	890 / -- / --
Outdoor coil	a.Number of rows		1	2
	b.Tube pitch(a)x row pitch(b)	mm	22x19.05	21x13.37
	c.Fin spacing	mm	1.4	1.4
	d.Fin type (code)		Hydrophilic aluminium	Hydrophilic aluminium
	e.Tube outside dia.and type	mm	Φ7.94, innergroove tube	Φ7,innergroove tube
	f.Coil length x height x width	mm	740x506x19.05	660x546x26.74
	g.Number of circuits		2	3
Outdoor air flow		m3/h	1800	2300
Outdoor noise level		dB(A)	56	60
Outdoor unit	Dimension(W*D*H)	mm	780x250x540	760x285x590
	Packing (W*D*H)	mm	910x335x585	887x355x645
	Net/Gross weight	Kg	28 / 30	36.5 / 39
Refrigerant type		g	R410A/800g	R410A/1150g
Design pressure		MPa	4.2/1.5	4.2/1.5
Refrigerant piping	Liquid side/ Gas side	mm(inch)	Φ6.35/Φ12.7(1/4"/1/2")	Φ6.35/Φ12.7(1/4"/1/2")
	Max. refrigerant pipe length	m	20	25
	Max. difference in level	m	8	10
Thermostat type			Remote Control	Remote Control
Operation temperature		℃	17~30	17~30
Room temperature	Indoor(cooling/ heating)	℃	17～32/0～30	17～32/0～30
	Outdoor(cooling/heating)	℃	18～43/-7～24	18～43/-7～24

Indoor			MDSF-24HRN1
Outdoor			MDOF-24HN1
Power supply		Ph-V-Hz	220-240V~ 50Hz, 1Ph
Cooling	Capacity	Btu/h	24000
	Input	W	2330
	Rated current	A	10,8
	EER	W/W	3,02
Heating	Capacity	Btu/h	25000
	Input	W	2140
	Rated current	A	9,9
	COP	W/W	3,42
Moisture Removal		L/h	2.6
Max. input consumption		W	4000
Max. current		A	20.0
Starting current		A	60
Compressor	Model		PA270G2CS-4MU1
	Type		ROTARY
	Brand		GMCC
	Capacity	Btu/h	23287/23458
	Input	W	2235/2385
	Rated current(RLA)	A	10.55/11.15
	Locked rotor Amp(LRA)	A	60
	Thermal protector		---
	Thermal protector position		INTERNAL
	Capacitor	uF	60
	Refrigerant oil/oil charge	ml	ESTER OIL VG74/850 CC
Indoor fan motor	Model		RPG45C
	Brand		Welling
	Input	W	77
	Capacitor	uF	3.0
	Speed(Hi/Mi/Lo)	r/min	1180 / 1100 / 900
Indoor coil	a.Number of rows		2
	b.Tube pitch(a)x row pitch(b)	mm	21x13.37
	c.Fin spacing	mm	1.3
	d.Fin type (code)		Hydrophilic aluminium
	e.Tube outside dia.and type	mm	Φ7,innergroove tube
	f.Coil length x height x width	mm	780x315x26.74
	g.Number of circuits		5
Indoor air flow (Hi/Mi/Lo)		m3/h	1150/1050/900
Indoor noise level (Hi/Mi/Lo)		dB(A)	48/45/41
Indoor unit	Dimension(W*D*H)	mm	1045x235x315
	Packing (W*D*H)	mm	1135x395x315
	Net/Gross weight	Kg	12 / 15
Outdoor fan motor	Model		YDK53-6C
	Brand		Welling
	Input	W	136
	Capacitor	uF	3.0
	Speed	r/min	800
Outdoor coil	a.Number of rows		2
	b.Tube pitch(a)x row pitch(b)	mm	21x13.37
	c.Fin spacing	mm	1.4
	d.Fin type (code)		Hydrophilic aluminium
	e.Tube outside dia.and type	mm	Φ7,innergroove tube
	f.Coil length x height x width	mm	785x651x26.74
	g.Number of circuits		4
Outdoor air flow		m3/h	2700
Outdoor noise level		dB(A)	58
Outdoor unit	Dimension(W*D*H)	mm	845x320x700
	Packing (W*D*H)	mm	965x395x755
	Net/Gross weight	Kg	49 / 52
Refrigerant type		g	R410A/1690g
Design pressure		MPa	4.2/1.5
Refrigerant piping	Liquid side/ Gas side	mm(inch)	Φ9.52/Φ15.9(3/8"/5/8")
	Max. refrigerant pipe length	m	25
	Max. difference in level	m	10
Thermostat type			Remote Control
Operation temperature		℃	17~30
Room temperature	Indoor(cooling/ heating)	℃	17～32/0～30
	Outdoor(cooling/heating)	℃	18～43/-7～24

3. Dimension

3.1 Indoor Unit

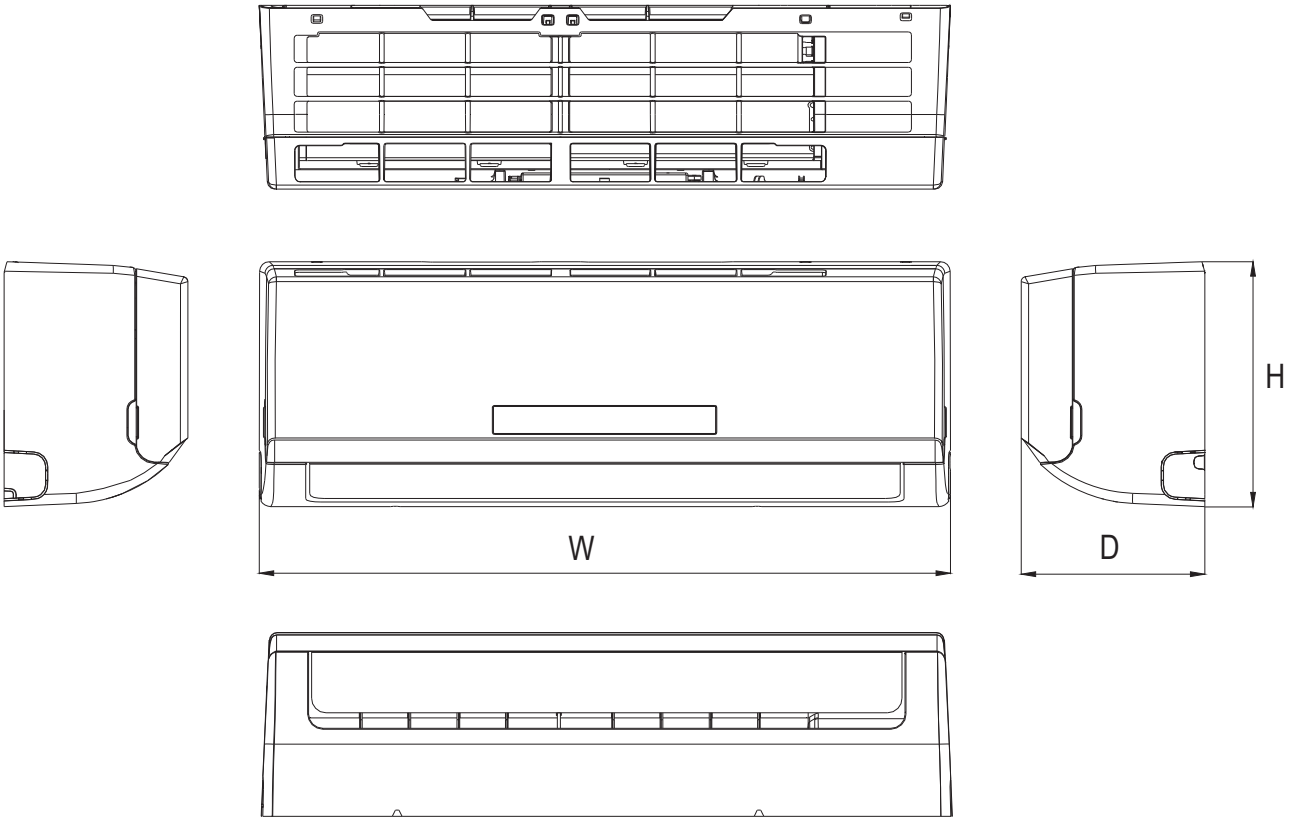

Model	W	D	H
MS12F-07HRN1-QC2	715	188	250
MS12F-09HRN1-QC2	715	188	250
MS12F-12HRN1-QC2	800	188	275
MS12F-18HRN1-QC2	940	205	275
MS12F-24HRN1-QB8W	1045	235	315

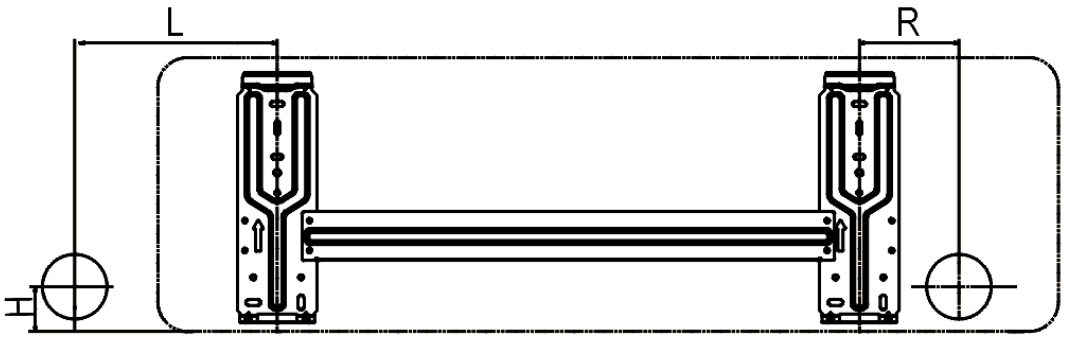

Model	L(mm)	R(mm)	H(mm)	Dimension of installation hole(mm)
MS12F-07HRN1-QC2	85	88	45	
MS12F-09HRN1-QC2				
MS12F-12HRN1-QC2	100	95	45	¢65
MS12F-18HRN1-QC2	110	100	45	
MS12F-24HRN1-QB8W	293	163	45	

3.2 Outdoor Unit

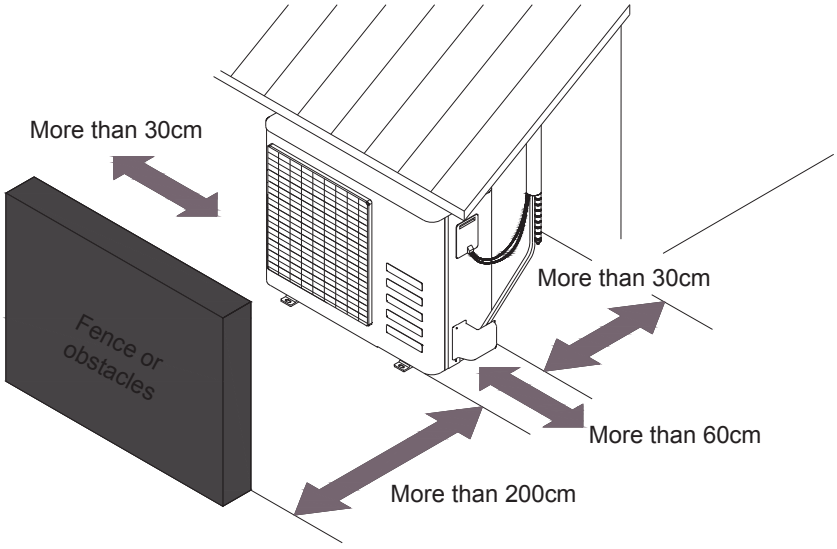

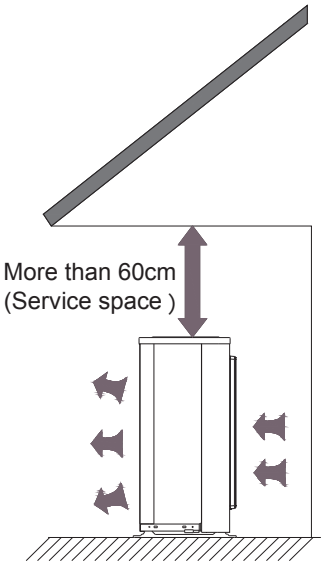

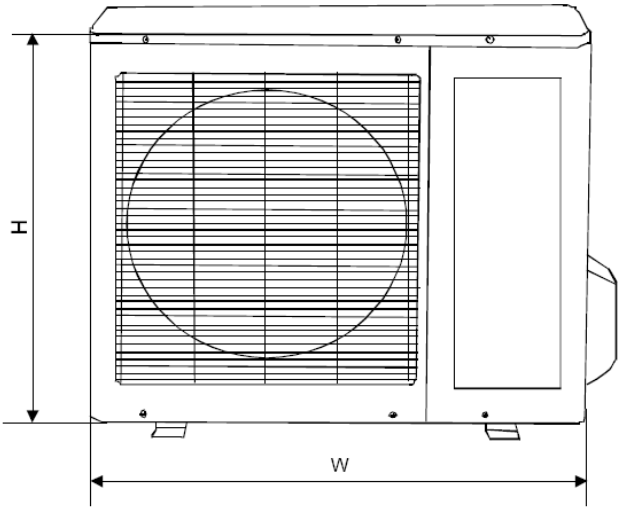

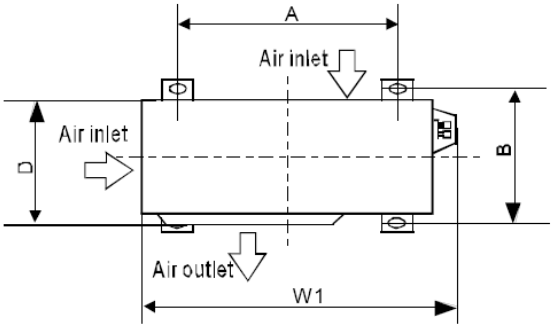

Model	W	D	H	W1	A	B
MOA-07HN1-QC2	700	240	540	757	458	250
MOA3-09HN1-QC2	700	240	540	757	458	250
MOB-12HN1-QC2	780	250	540	843	549	276
MOC2-18HN1-QC2	760	285	590	823	530	290
MOF-24HN1-QB8W	845	320	700	908	560	335

4. Refrigerant Cycle Diagram

For heat pump models:

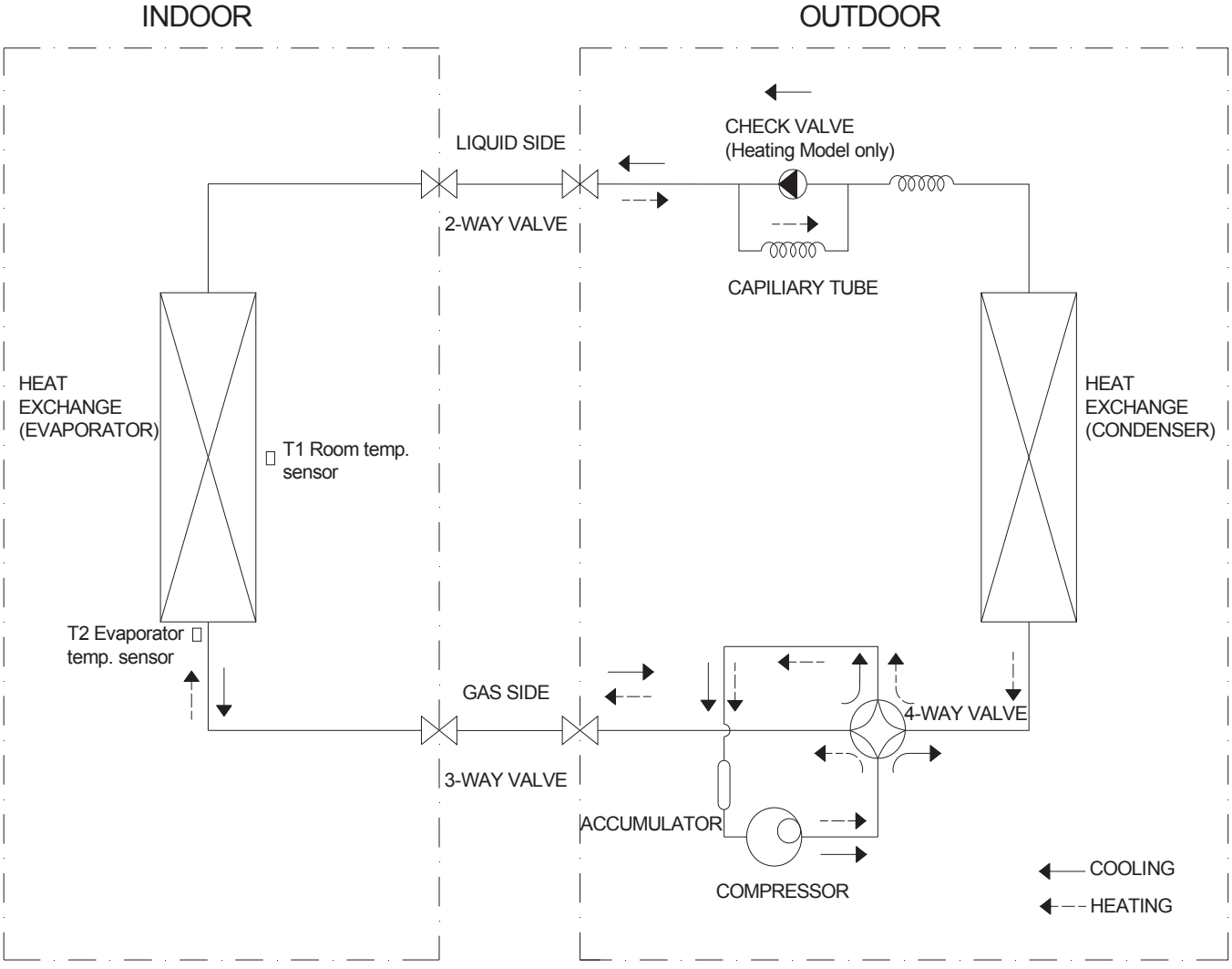

T3 temp. sensor is only for 24 and 28k

5. Wiring Diagram

5.1 Indoor Unit

MS12F-07HRN1-QC2, MS12F-09HRN1-QC2, MS12F-12HRN1-QC2, MS12F-18HRN1-QC2,

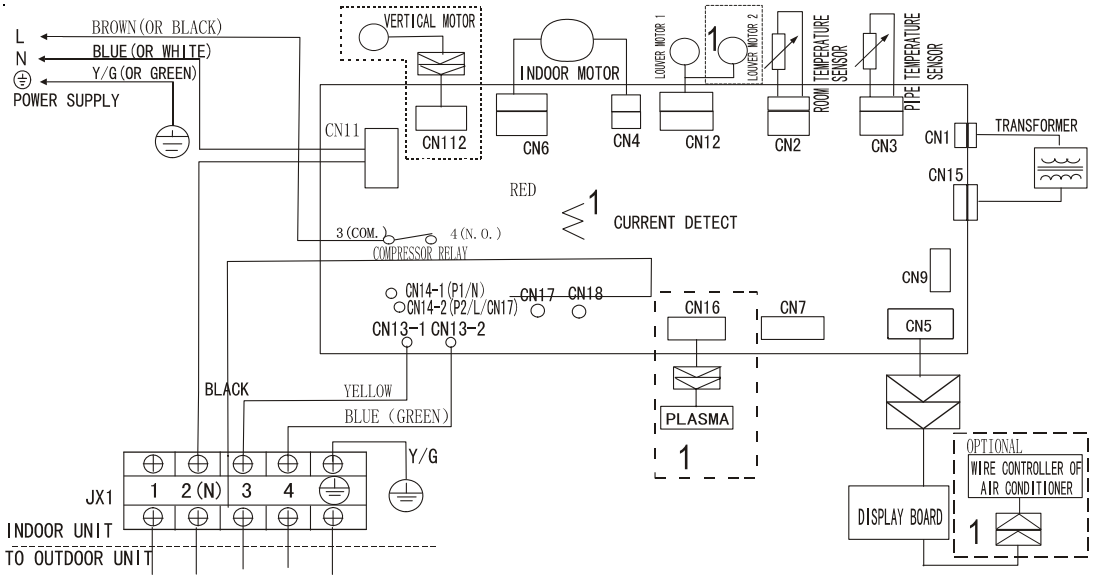

NOTE:
1.The wiring diagram is for explanation purpose only. The actual shape of the components may be different.
2.Symbol 1 indicates optional components
3.The Color Of cable is different according to the Standards:IEC Standards (BROWN、BIUE、Y/G),UL Standards (BLACK、WHITE、GREEN)

MS12F-24HRN1-QB8W,

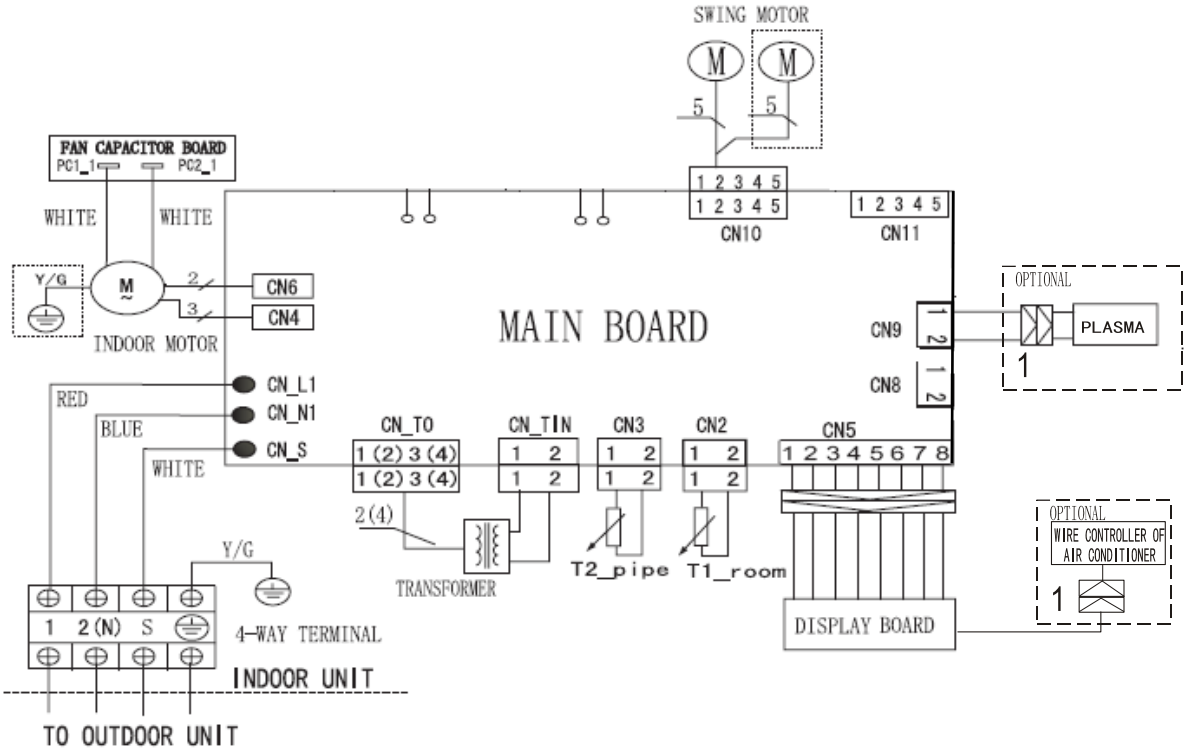

NOTE:
1.The wiring diagram is for explanation purpose only. The actual shape of the components may be different.
2.Symbol 1 indicates optional components
3.The Color Of cable is different according to the Standards:IEC Standards (BROWN、BIUE、Y/G),UL Standards (BLACK、WHITE、GREEN)

5.2 Outdoor Unit

MOA-07HN1-QC2, MOA3-09HN1-QC2, MOB-12HN1-QC2,

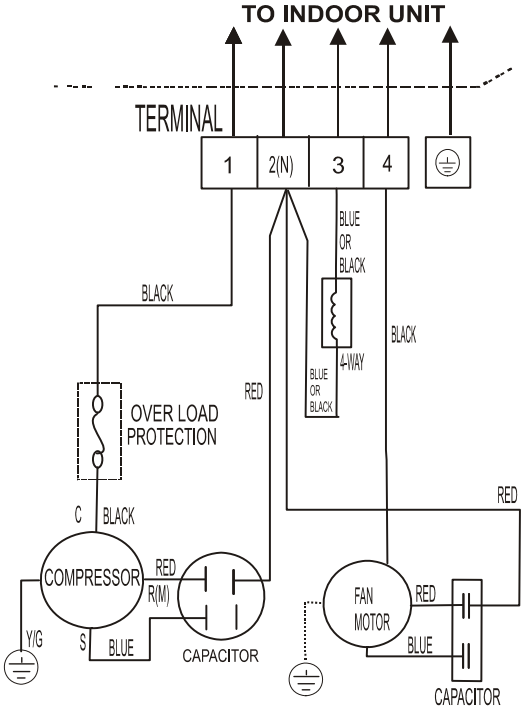

MOC2-18HN1-QC2,

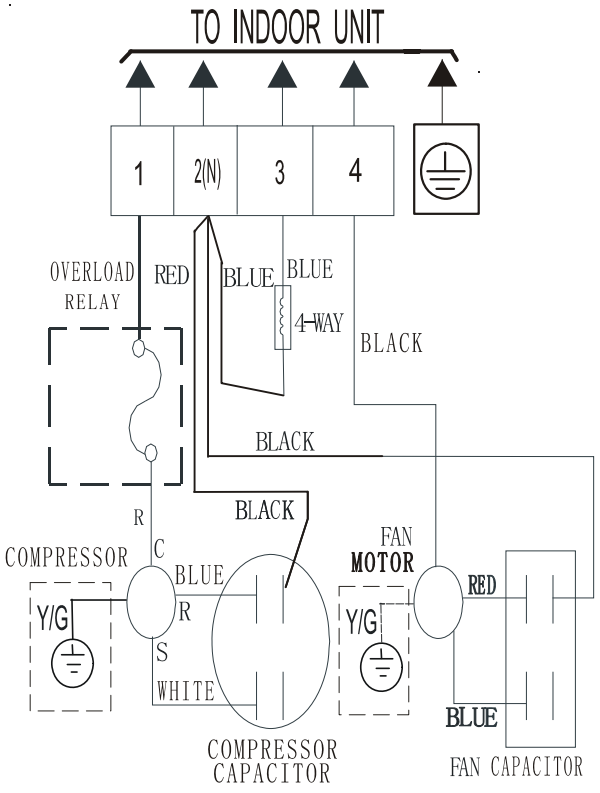

MOF-24HN1-QB8W,

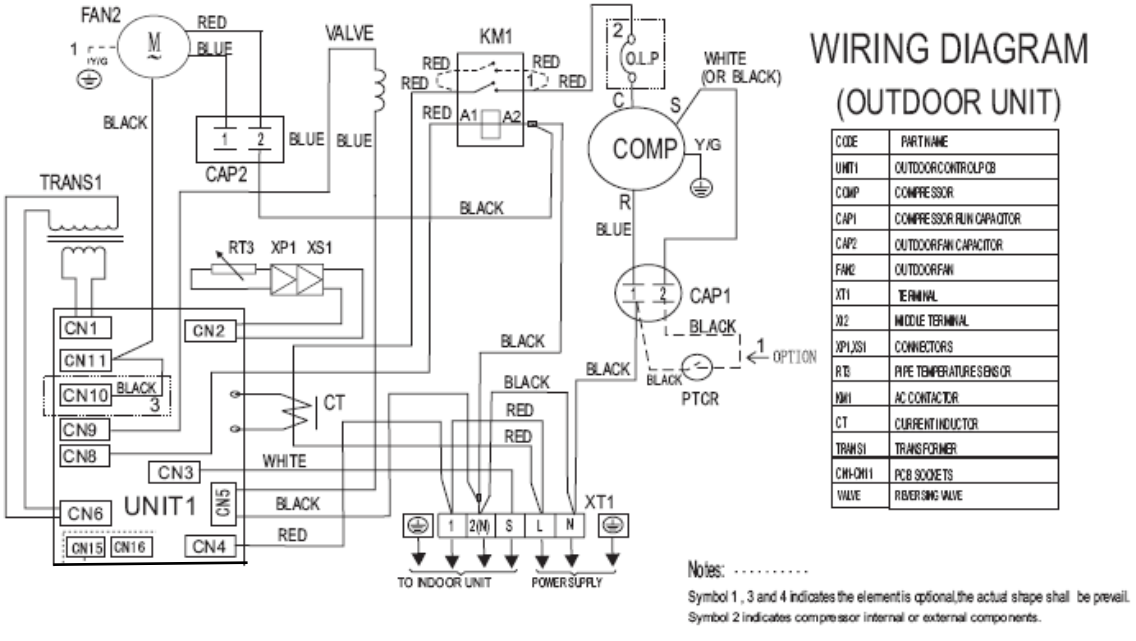

6 Installation Details

6.1 Wrench torque sheet for installation

Outside diameter		Torque	Additional tightening torque
mm	inch	N.cm	N.cm
Φ6.35	1/4	1500(153kgf.cm)	1600(163kgf.cm)
Φ9.52	3/8	2500(255kgf.cm)	2600(265kgf.cm)
Φ12.7	1/2	3500(357kgf.cm)	3600(367kgf.cm)
Φ15.9	5/8	4500(459kgf.cm)	4700(479kgf.cm)
Φ19	3/4	6500(663kgf.cm)	6700(683kgf.cm)

6.2 Connecting the cables

The power cord of connect should be selected according to the following specifications sheet.

Rated current of appliance	Nominal cross-sectional area (mm^2)
>3 and ≤6	0.75
>6 and ≤10	1
>10 and ≤16	1.5
>16 and ≤25	2.5

The cable size and the current of the fuse or switch are determined by the maximum current indicated on the nameplate which located on the side panel of the unit. Please refer to the nameplate before selecting the cable, fuse and switch.

6.3 Pipe length and the elevation

The pipe length and refrigerant amount:

Model	Pipe size		Standard length (m)	Max. Elevation B (m)	Max. Length A (m)	Additional refrigerant (g/m)
	Gas	Liquid				
MS12F-07HRN1-QC2+MOA-07HN1-QC2	3/8" (Φ9.52)	1/4" (Φ6.35)	5	8	20	20
MS12F-09HRN1-QC2+MOA3-09HN1-QC2	3/8" (Φ9.52)	1/4" (Φ6.35)	5	8	20	20
MS12F-12HRN1-QC2+MOB-12HN1-QC2	1/2" (Φ12.7)	1/4" (Φ6.35)	5	8	20	20
MS12F-18HRN1-QC2+MOC2-18HN1-QC2	1/2" (Φ12.7)	1/4" (Φ6.35)	5	10	25	20
MS12F-24HRN1-QB8W+MOF-24HN1-QB8W	5/8" (Φ15.9)	3/8" (Φ9.52)	5	10	25	40

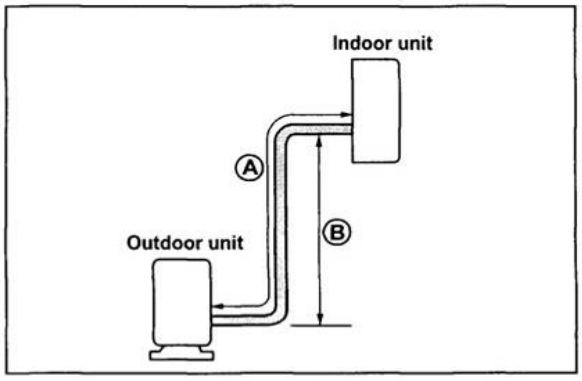

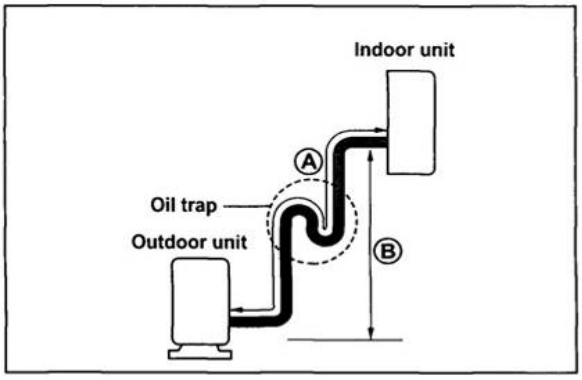

Caution:

The capacity test is based on the standard length and the maximum permissive length is based on the system reliability.

The oil trap should be installed per 5-7 meters.

7. Operation Characteristics

Model / Temperature	Cooling operation	Heating operation	Drying operation
Room temperature	17℃～32℃	0℃～30℃	10℃～32℃
			17℃～32℃
Outdoor temperature	18℃～43℃	-7℃～24℃	11℃～43℃
			18℃～43℃
	（-25℃～43℃：For the models with low temperature cooling system）		

CAUTION:

1. If the air conditioner is used beyond the above conditions, certain safety protection features may come into operation and cause the unit to operate abnormally.

2. The room relative humidity should be less than 80%. If the air conditioner operates beyond this figure, the surface of the air conditioner may attract condensation. Please set the vertical air flow louver to its maximum angle (vertically to the floor), and set HIGH fan mode.

3. The optimum performance will be achieved during this operating temperature zone.

8. Electronic function

8.1 Abbreviation

T1: Indoor room temperature

T2: Coil temperature of evaporator

T3: Coil temperature of condenser

T4: Outdoor ambient temperature

T5: Compressor discharge temperature

8.3 Main Protection

8.3.1 Time Delay at restart for compressor.

8.3.2 Sensor protection at open circuit and breaking disconnection.

8.3.3 Zero crossing detection error protection

If AC can not detect zero crossing signal for 4 minutes or the zero crossing signal time interval is not correct, the unit will stop and the LED will display the failure. The correct zero crossing signal time interval should be between 6-13ms.

8.3.4 Fan Speed is out of control

When Indoor Fan Speed is too low(lower than 300RPM) lasting 2 minutes, the unit stops and LED displays failure information and can’t returns to normal operation automatically.

8.3.5 Current protection

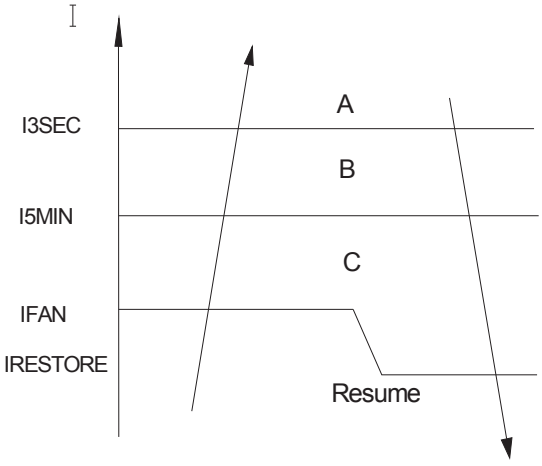

A zone : The current exceeds I_{3SEC} for 5 seconds the compressor and outdoor fan will shut off.
B zone: The current exceeds I_{5min} for 5 minutes, the compressor and outdoor fan will shut off.

C zone: The current exceeds I_{FAN}, the outdoor fan will shut off if AC is in heating mode. If AC is in cooling mode, the indoor fan will run at low speed.

8.4 Operation Modes and Functions

8.4.1 Fan mode

(1) Outdoor fan and compressor stop.

(2) Temperature setting function is disabled, and no setting temperature is displayed.

(3) Indoor fan can be set to high/med/low/auto.

(4) The louver operates the same as in cooling mode.

(5) Auto fan:

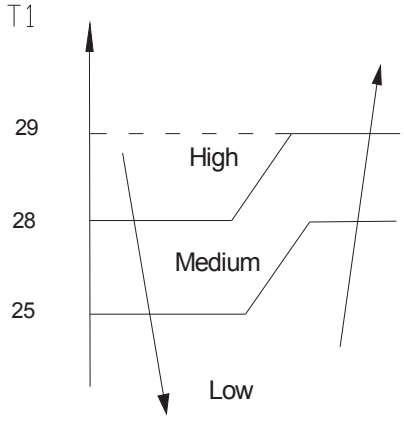

8.4.2 Cooling Mode

8.4.2.1 Compressor running rules

Once the compressor starts up, it will run 5.5 minutes. And then it will follow the below rules:

When indoor room temp.T1 is lower than Tn, the compressor and outdoor fan will shut off. When T1 is higher than Tm, the compressor and outdoor fan will start up.

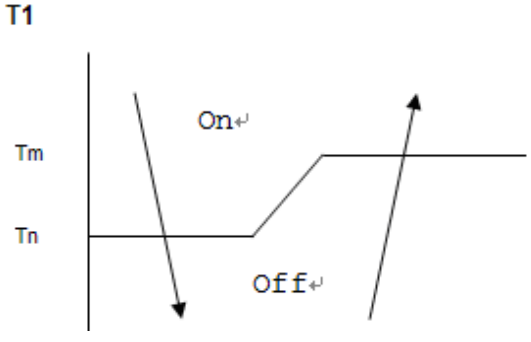

Tm=Ts, Tn=Ts-2.

8.4.2.2 Outdoor fan running rules

The On-off outdoor units have single fan speed. The outdoor fan will run following the compressor except when AC is in evaporator high temp. protection in heating mode ,condenser high temp. protection in cooling mode, defrosting mode and the current protection.

8.4.2.3 Indoor fan running rules

In cooling mode, indoor fan runs all the time and the speed can be selected as high, medium, low and auto.

The auto fan:

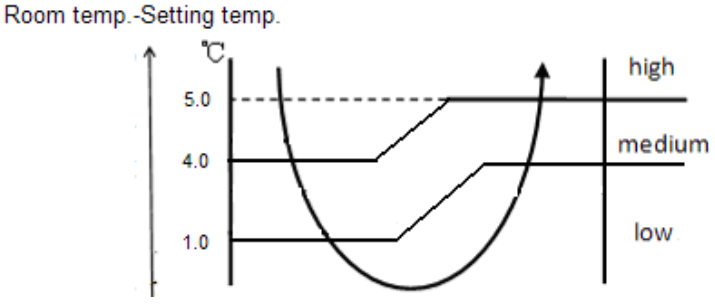

8.4.2.4 Low evaporator coil temperature T2 protection

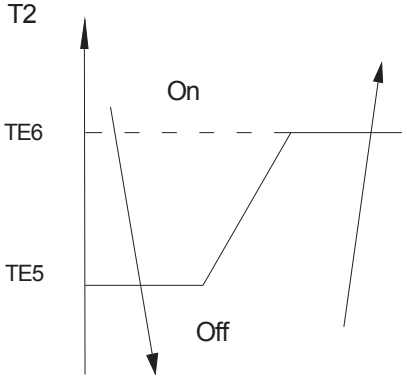

When the evaporator coil temp.T2 keeps lower than TE5 for 5 minutes, the compressor and outdoor fan will shut off. When T2 is higher than TE6, the compressor and outdoor fan will restart up.

8.4.3 Heating Mode

8.4.3.1 Compressor running rules:

Once the compressor starts up, it will run 7 minutes. And then it will follow the below rules:

When indoor room temp.T1 is higher than Tj, the compressor and outdoor fan will shut off. When T1 is lower than Tk, the compressor and outdoor fan will start up.

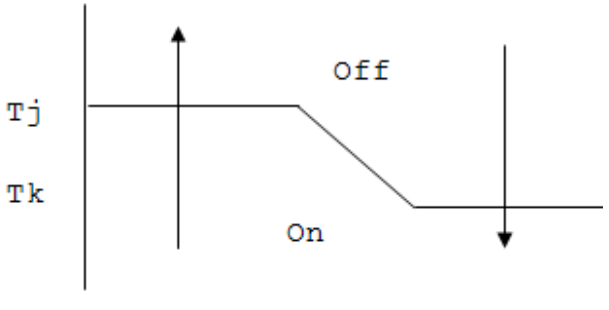

While Tj=Ts+TB; Tk=Ts+TB-2

8.4.3.2 Outdoor fan running rules:

The outdoor units have single fan speed. The outdoor fan will run following the compressor except when AC is in evaporator high temp. protection in heating mode , condenser high temp. protection in cooling mode ,defrosting mode and the current protection.

8.4.3.3 Indoor fan running rules:

Auto fan action:

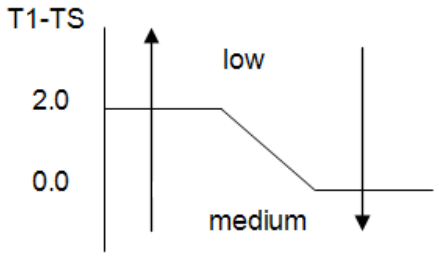

When T1-Ts>2℃, the indoor fan will run at low speed.

When T1-Ts≤0℃, the indoor fan will run at medium speed.

8.4.3.4 Defrosting mode：

For 7, 9, 12 and 18k,

- **Condition of defrosting:**

1, AC will enter the defrosting mode if all of the following items(1.1,1.2,1.3 or 1.1, 1.2, 1.4) are satisfied.

ΔT′=ΔT, if the indoor fan=low speed.

ΔT′=ΔT+3, if the indoor fan=medium speed.
ΔT′=ΔT+5, if the indoor fan=high speed.

ΔT′max is the maximum value of ΔT′.

When fan speed changes(including anti-cold wind function), AC will detect ΔT after two minutes.

1.1 AC meets A1 or A2.

A1: The cumulative compressor running time is between 45~120 minutes. Meanwhile the value of ΔT meets the below table.

℃	ΔT
High speed	$<TH_{DEFROST}$
Medium speed	$<TM_{DEFROST}$
Low speed	$<TL_{DEFROST}$

A2: The cumulative compressor running time is over 120 minutes. Meanwhile the value of ΔT meets the below table.

℃	ΔT
High speed	$<TH_{DEFROST}+2$
Medium speed	$<TM_{DEFROST}+2$
Low speed	$<TL_{DEFROST}+2$

1.2 If the fan speed and the evaporator coil temp.T2 meet the below issues:

℃	T2
High speed	＜43℃
Medium speed	＜46℃
Low speed	＜48℃

1.3 After the compressor keeps running 8 minutes, ΔT′ max－ΔT′ ≥6℃（ΔT=T2-T1）

1.4 After the compressor keeps running 8 minutes, if -5℃<T1<45℃ and -5℃<T2<45℃, AC will detect the △T. Mark the time of ΔT′ dropped 1.5 degree as t. When 1min<t< FALL08CTM, this condition is satisfied.(FALL08CTM is controlled by EEPROM chip).

About the setting defrosting time:

	runtime（minute）	Defrosting time（minute）
Case 1	Runtime=45	10
Case 2	45＜runtime≤60	7.5
Case 3	60＜runtime≤90	8.5
Case 4	90＜runtime≤120	10
Case 5	120＜runtime	12

2, AC will enter the defrosting mode if all of the following items are satisfied:

2.1 The compressor cumulative running time is over 45 minutes.

2.2 The compressor continuous running time is over 8 minutes.

2.3 The indoor fan is off.

In this case, the defrosting time is ten minutes.

3, AC will enter the defrosting mode if all of the following items are satisfied:

3.1 After AC runs in heating mode, there is no defrosting before.

3.2 The cumulative compressor running time is over 45 minutes.

3.3 The 1.1 and 1.2 are satisfied if AC is in high/Medium/Low speed .Or the fan speed is breeze.

In this case, the defrosting time is ten minutes.

a) Condition of ending defrosting:

If any one of the following items is satisfied, the defrosting will terminate and the machine will turn to normal heating mode.

(1) The defrosting time is reached to the setting value.

(2) The defrosting has been running for 3 minutes and T2≥2℃.

(3) The defrosting has been running for 2 minutes, check the value of T2. If $T2-T2_{min}$≥2℃ during 4 minutes, the defrosting will terminate.

(4) The compressor current has reached to $I_{DEFROST}$ or above lasting 7 seconds, $I_{DEFROST}$ differs in different models

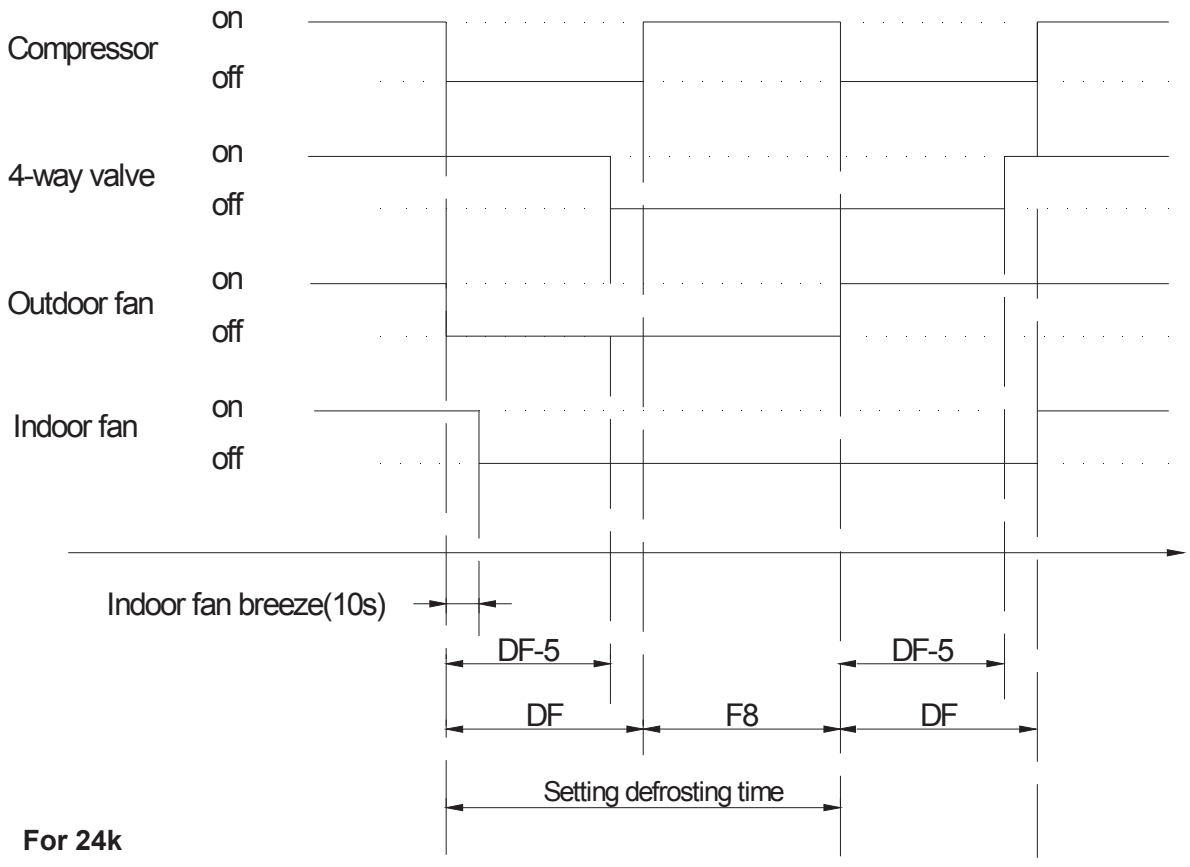

For 24k

- **Condition of defrosting:**

AC will enter defrosting mode if any of the following items is satisfied.

(1) If T3<TC1 and the compressor keeps running over 45 minutes. Meanwhile T3＜TC3 for 3minutes

(2) After the last defrosting, the time that the outdoor fan is off but the compressor is on in high T2 protection cumulates up to 90 minutes.

- **Condition of ending defrosting:**

If any one of the following items is satisfied, the defrosting will terminate and the machine will turn to normal heating mode.

(1) T3 rises to be higher than TC2.

(2) The machine has run for 10 minutes in defrosting.

- **Defrosting action：**

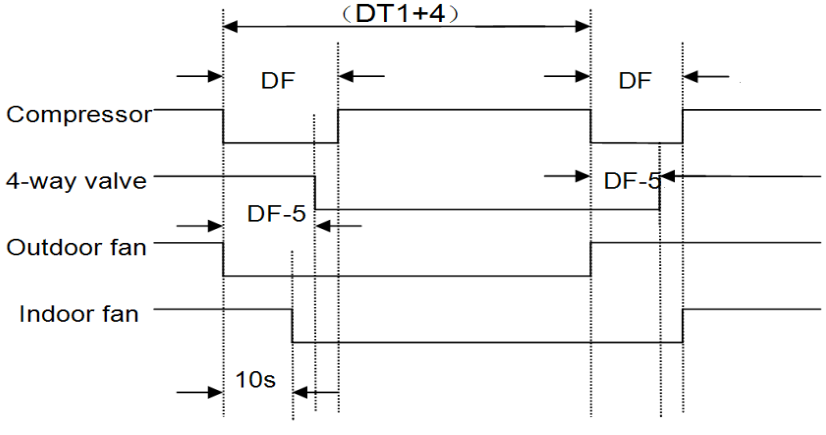

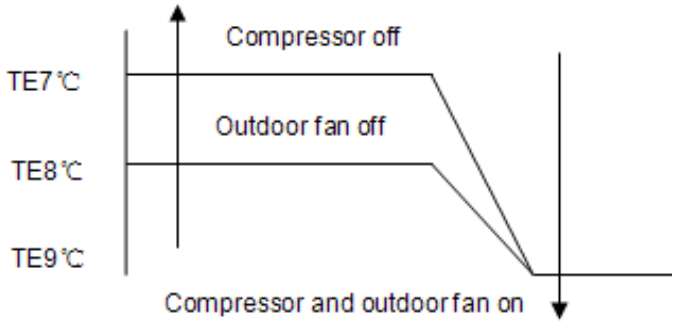

8.4.4 Auto-mode

This mode can be chosen with remote controller and the setting temperature can be changed between 17~30℃.

In auto mode, the machine will choose cooling, heating or fan-only mode according to ΔT (ΔT =T1-Ts).

ΔT=T1-Ts	Running mode
ΔT＞2℃	Cooling
-3≤ΔT≤2℃	Fan-only
ΔT<-3℃	Heating(For cooling only models, they will run at fan speed)

AC will run in auto mode in the below cases:

（1） Pressing the forced auto button.

（2） If AC is off, it will run in auto mode when the timer on function is active.

（3） After setting the mode, AC will run in auto mode if the compressor keeps not running for 20 minutes.

8.4.5 Drying mode

8.4.5.1 The compressor is cycled running with 10 minutes on and then 5 minutes off. The indoor fan will keep running at low speed.

8.4.5.2 In drying mode, if room temperature is lower than 10℃, the compressor will stop and not resume until room temperature exceeds 13℃.

8.4.5.3 The evaporator anti-freezing protection is the same as that in cooling mode.

8.4.6 Forced operation function

Press the touch button continually, the AC will run as below sequence:

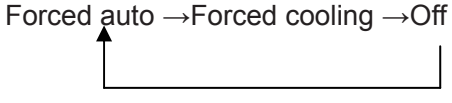

Forced cooling mode:

The compressor and outdoor fan keep running and the indoor fan runs at low speed. After running for 30 minutes, AC will turn to auto mode with 24℃ setting temperature.

Forced auto mode:

The action of forced auto mode is the same as normal auto mode with 24℃ setting temperature.

- When AC receives signals, such as switch on, switch off, timer on, timer off, mode setting, fan speed setting, sleeping mode setting, follow me setting, it will quit the forced operation.
- The forced operation function can not be memorized if power off.

8.4.7 Timer function

8.4.7.1 Timing range is 24 hours.

8.4.7.2 Timer on. The machine will turn on automatically when reaching the setting time.

8.4.7.3 Timer off. The machine will turn off automatically when reaching the setting time.

8.4.7.4 Timer on/off. The machine will turn on automatically when reaching the setting “on” time, and then turn off automatically when reaching the setting “off” time.

8.4.7.5 Timer off/on. The machine will turn off automatically when reaching the setting “off” time, and then turn on automatically when reaching the setting “on” time.

8.4.7.6 The timer function will not change the AC current operation mode. Suppose AC is off now, it will not start up firstly after setting the “timer off” function. And when reaching the setting time, the timer LED will be off and the AC running mode has not been changed.

8.4.7.7 The setting time is relative time.

8.4.7.8 The AC will quit the timer function when it has malfunction.

8.4.8 Sleep function mode

8.4.8.1 Operation time in sleep mode is 7 hours. After 7 hours the AC quits this mode and turns off.

8.4.8.2. Operation process in sleep mode is as follow:

When cooling, the setting temperature rises 1℃ (be lower than 30℃) every one hour, 2 hours later the setting temperature stops rising and indoor fan is fixed as low speed.

When heating, the setting temperature decreases 1℃ (be higher than 17℃) every one hour, 2 hours later the setting temperature stops rising and indoor fan is fixed as low speed. (Anti-cold wind function has the priority)

8.4.8.3 Timer setting is available

8.4.8.4 When user uses timer off function in sleep mode (or sleep function in timer off mode), if the timing is less than 7 hours, sleep function will be cancelled when reaching the setting time. If the timing is more than 7 hours, the machine will not stop until reaches the setting time in sleep mode.

8.4.9 Auto-Restart function

The indoor unit is equipped with auto-restart function, which is carried out through an auto-restart module. In case of a sudden power failure, the module memorizes the setting conditions before the power failure. The unit will resume the previous operation setting (not including swing function) automatically after 3 minutes when power returns.

If the memorization condition is forced cooling mode, the unit will run in cooling mode for 30 minutes and turn to auto mode as 24℃ setting temp.

If AC is off before power off and AC is required to start up now, the compressor will have 1 minute delay when power on. Other conditions, the compressor will have 3 minutes delay when restarts.

8.4.10 Refrigerant Leakage Detection

With this new technology, the display area will show “EC” when the outdoor unit detects refrigerant leakage.

8.4.11 Louver Position Memory Function

When starting the unit again after shutting down, its louver will restore to the angle originally set by the user, but the precondition is that the angle must be within the allowable range, if it exceeds, it will memorize the maximum angle of the louver. During operation, if the power fails or the end user shuts down the unit in the turbo mode, the louver will restore to the default angle.

8.4.12 8℃ Heating(optional)

In heating operation, the preset temperature of the air conditioner can be as lower as 8℃, which keeps the room temperature steady at 8℃ and prevents household things freezing when the house is unoccupied for a long time in severe cold weather.

9. Troubleshooting

9.1 Indoor Unit Error Display

Operation lamp	Timer lamp	Display	LED STATUS
☆ 1 time	X	E1	EEPROM parameter error
☆ 2 times	X	E2	Zero-crossing signal detection error(except
☆ 3 times	X	E3	Indoor fan speed has been out of control
☆ 5 times	X	E5	Indoor room temperature sensor T1 open circuit or short circuit
☆ 6 times	X	E6	Evaporator coil temperature sensor T2 open circuit or short circuit
☆ 7 times	X	E7	Condenser coil temperature sensor T3 open circuit or short circuit(only for 24/28k)
☆ 2 times	O	EC	Refrigerant Leakage Detection
☆ 8 times	X	E8	
☆ 9 times	X	E9	Indoor / outdoor units communication error(only for 24/28k)

O（light）　　X（off）　　☆（flash）

9.2 Diagnosis and Solution

9.2.1 EEPROM parameter error diagnosis and solution

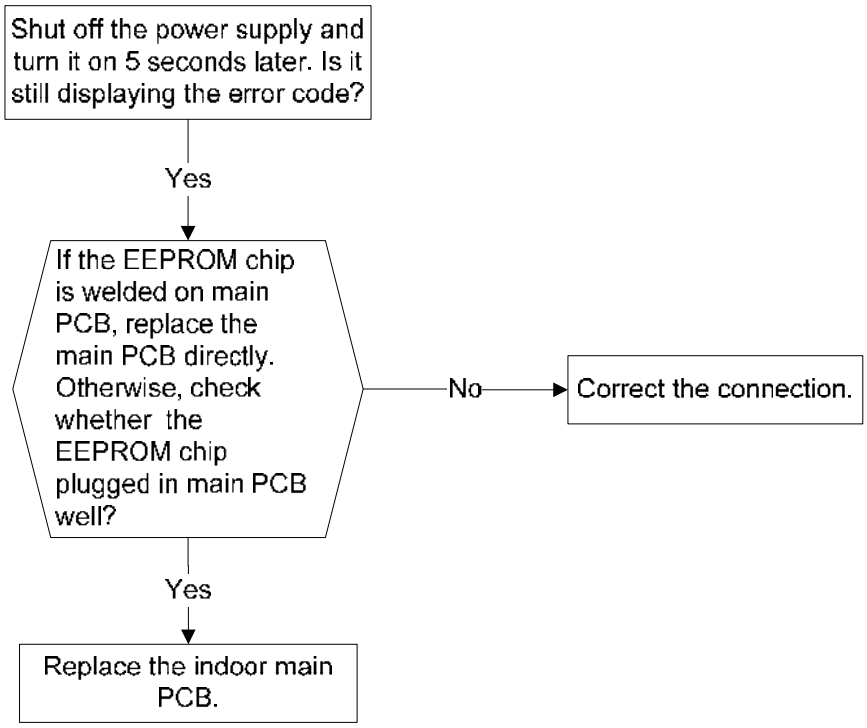

EEPROM: a read-only memory whose contents can be erased and reprogrammed using a pulsed voltage.

9.2.2 Zero crossing detection error diagnosis and solution

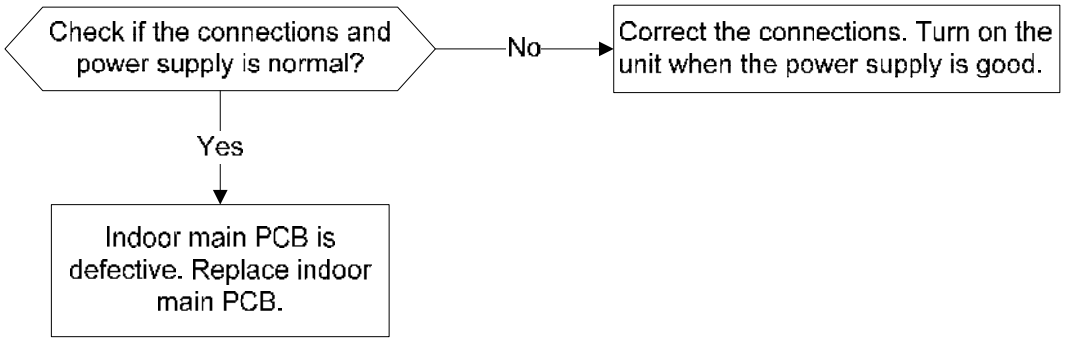

9.2.3 Indoor fan speed has been out of control diagnosis and solution

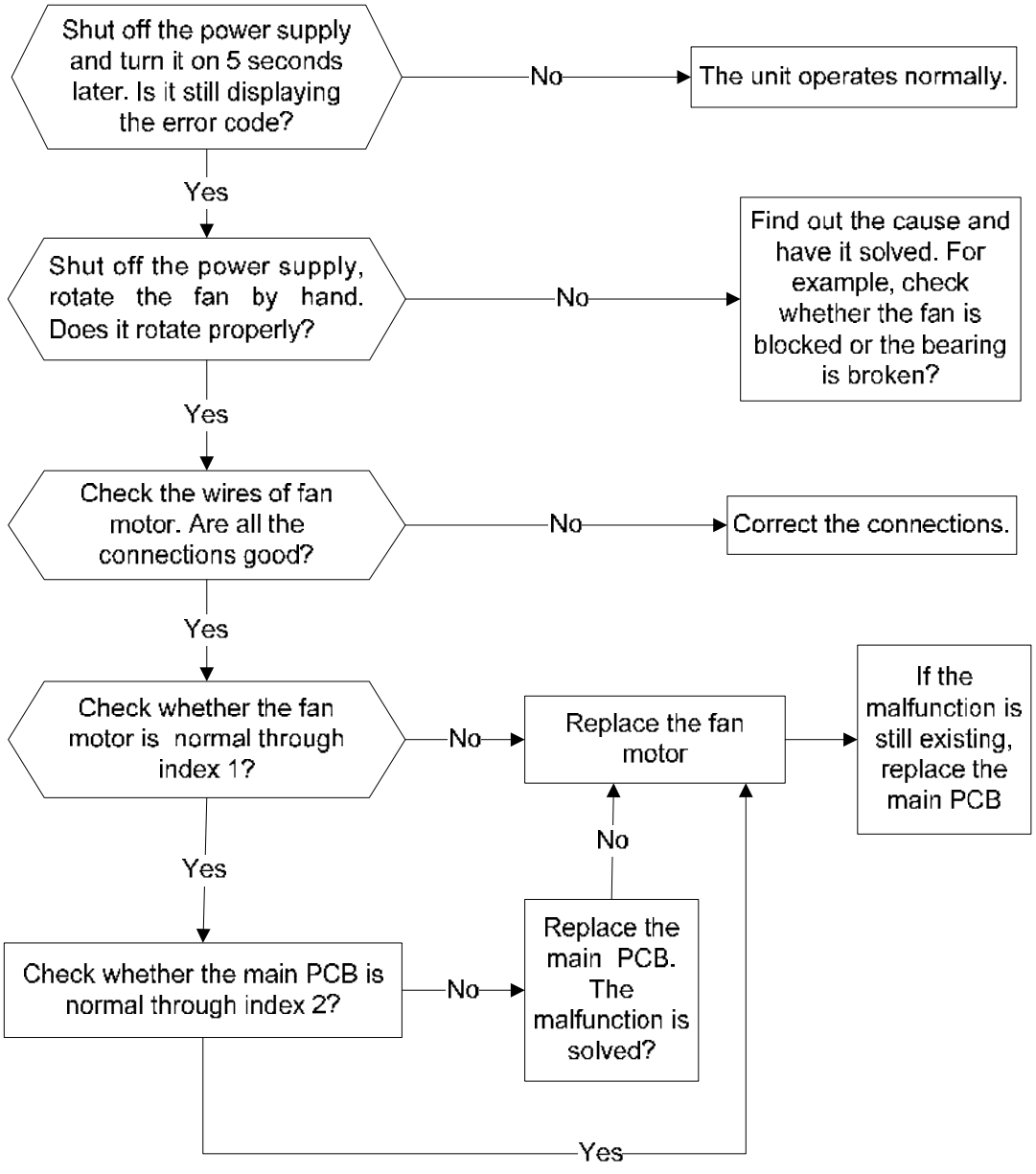

Index 1:

1:Indoor AC Fan Motor

Measure the resistance value of each winding by using the tester.

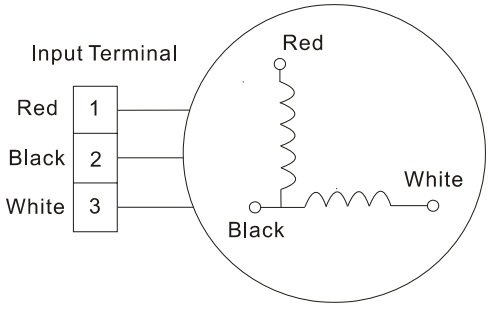

For the resistance value of the motor, please contact the technical engineer.

Index2:

1: Indoor AC Fan Motor

Power on and set the unit running in fan mode at high fan speed. After running for 15 seconds, measure the voltage of pin1 and pin2. If the value of the voltage is less than 100V(208~240V power supply)or 50V(115V power supply), the PCB must has problems and need to be replaced.

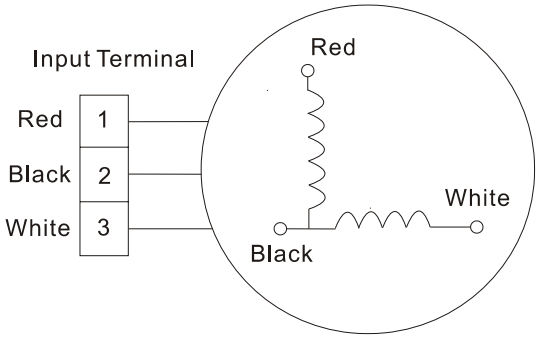

9.2.4 Open circuit or short circuit of temperature sensors diagnosis and solution

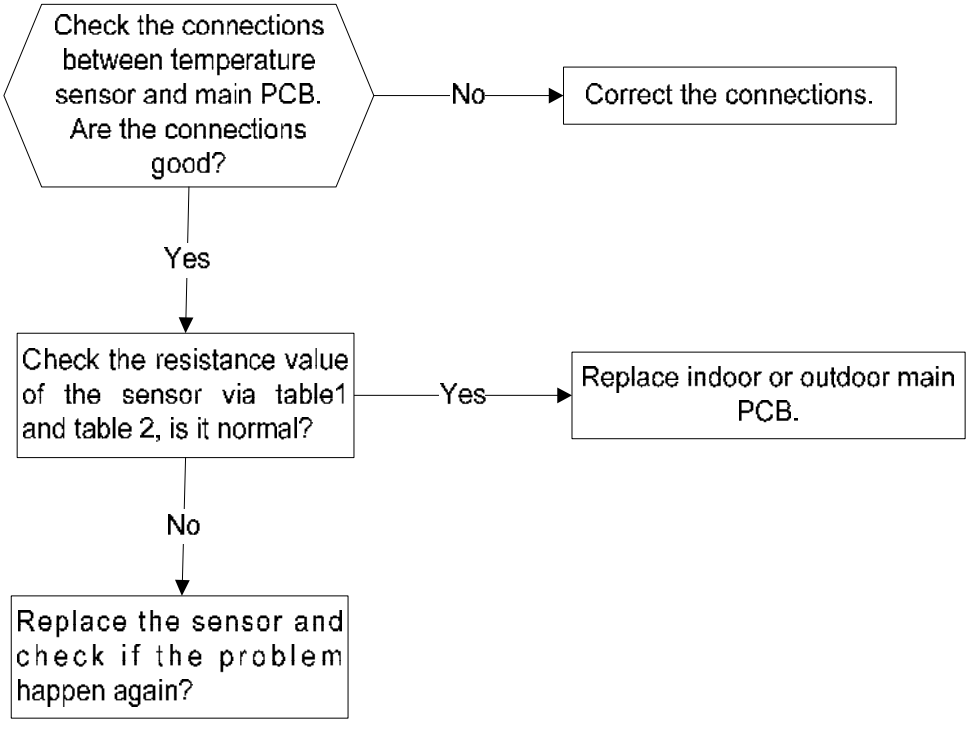

9.2.5 Refrigerant Leakage Detection diagnosis and solution

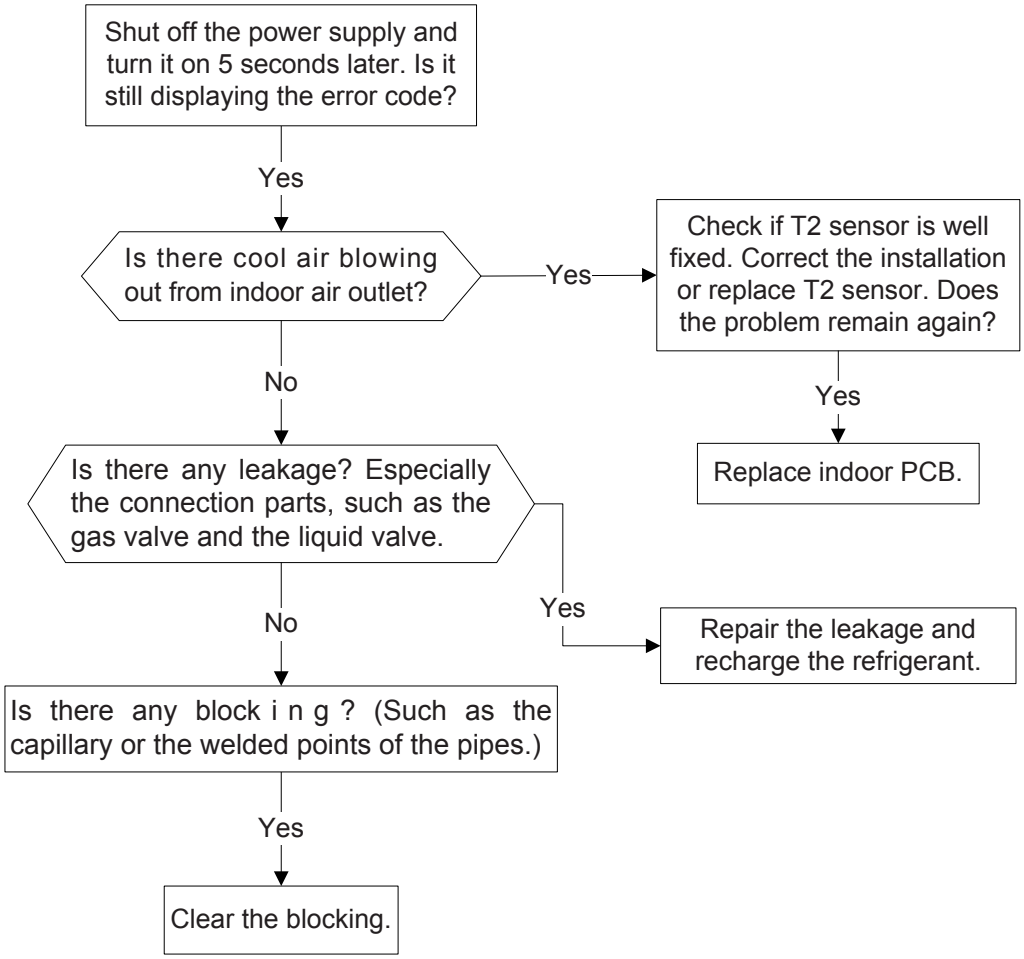

9.2.6 Indoor / outdoor units communication error diagnosis and solution

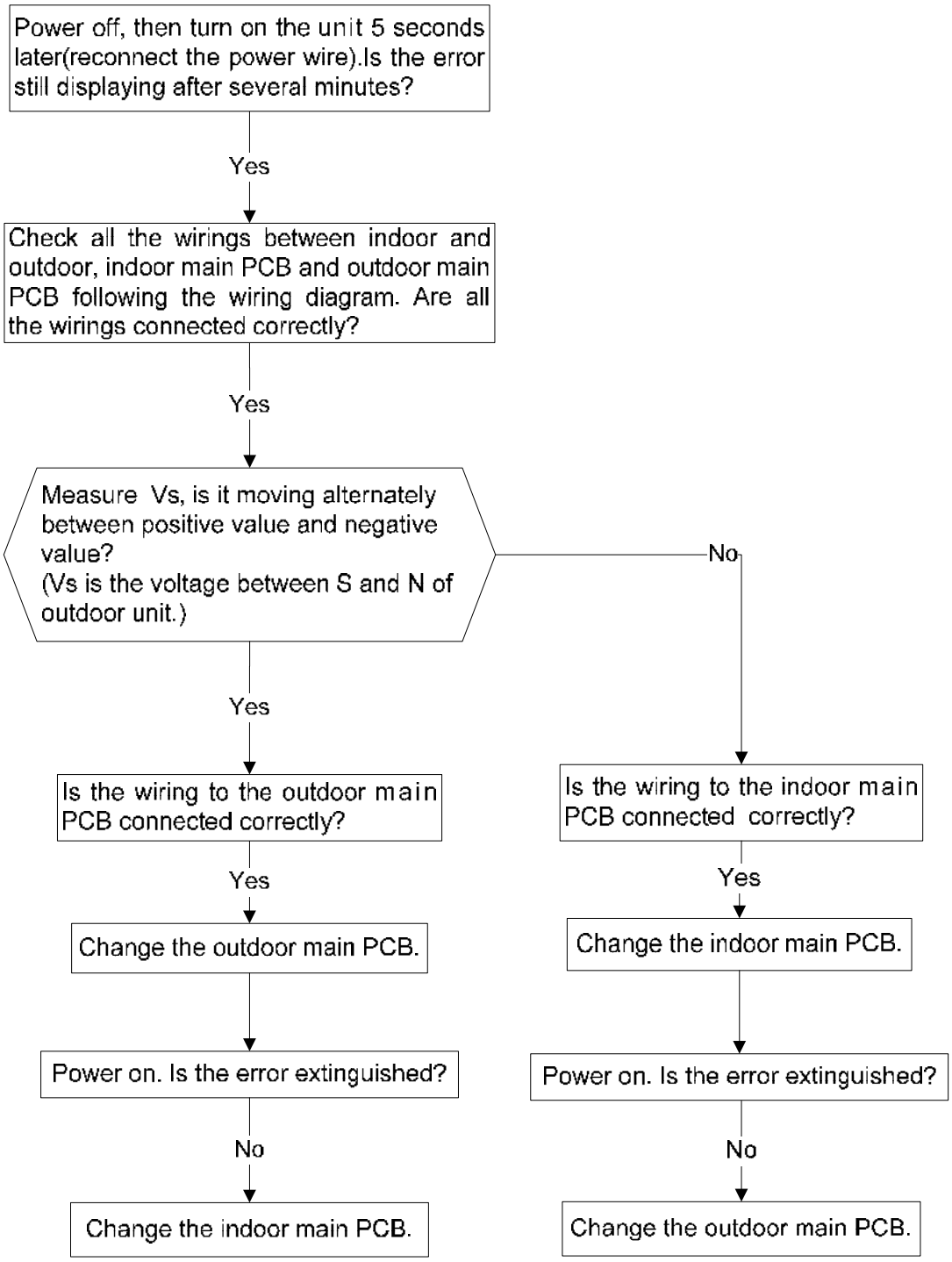

Main parts check

1.Temperature sensor checking

Disconnect the temperature sensor from PCB, measure the resistance value with a tester.

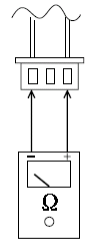

Tester

Temperature Sensors.

Room temp.(T1) sensor,

Indoor coil temp.(T2) sensor,

Outdoor coil temp.(T3) sensor,

Outdoor ambient temp.(T4) sensor,

Compressor discharge temp.(T5) sensor.

Measure the resistance value of each winding by using the multi-meter.

Table1:Some frequently-used R-T data for T1,T2,T3 and T4 sensor:

Temperature (℃)	5	10	15	20	25	30	40	50	60
Resistance Value (KΩ)	26.9	20.7	16.1	12.6	10	8	5.2	3.5	2.4

Table2:Some frequently-used R-T data for T5 sensor:

Temperature (℃)	5	15	25	35	60	70	80	90	100
Resistance Value (KΩ)	141.6	88	56.1	36.6	13.8	9.7	6.9	5	3.7

Resistance value (KΩ)

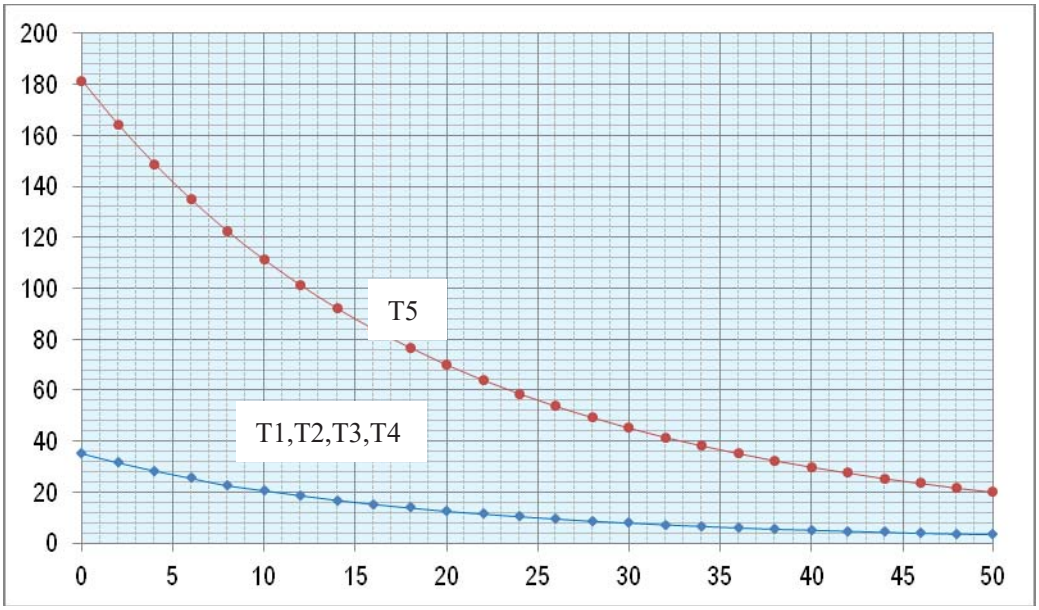

Temperature (℃)