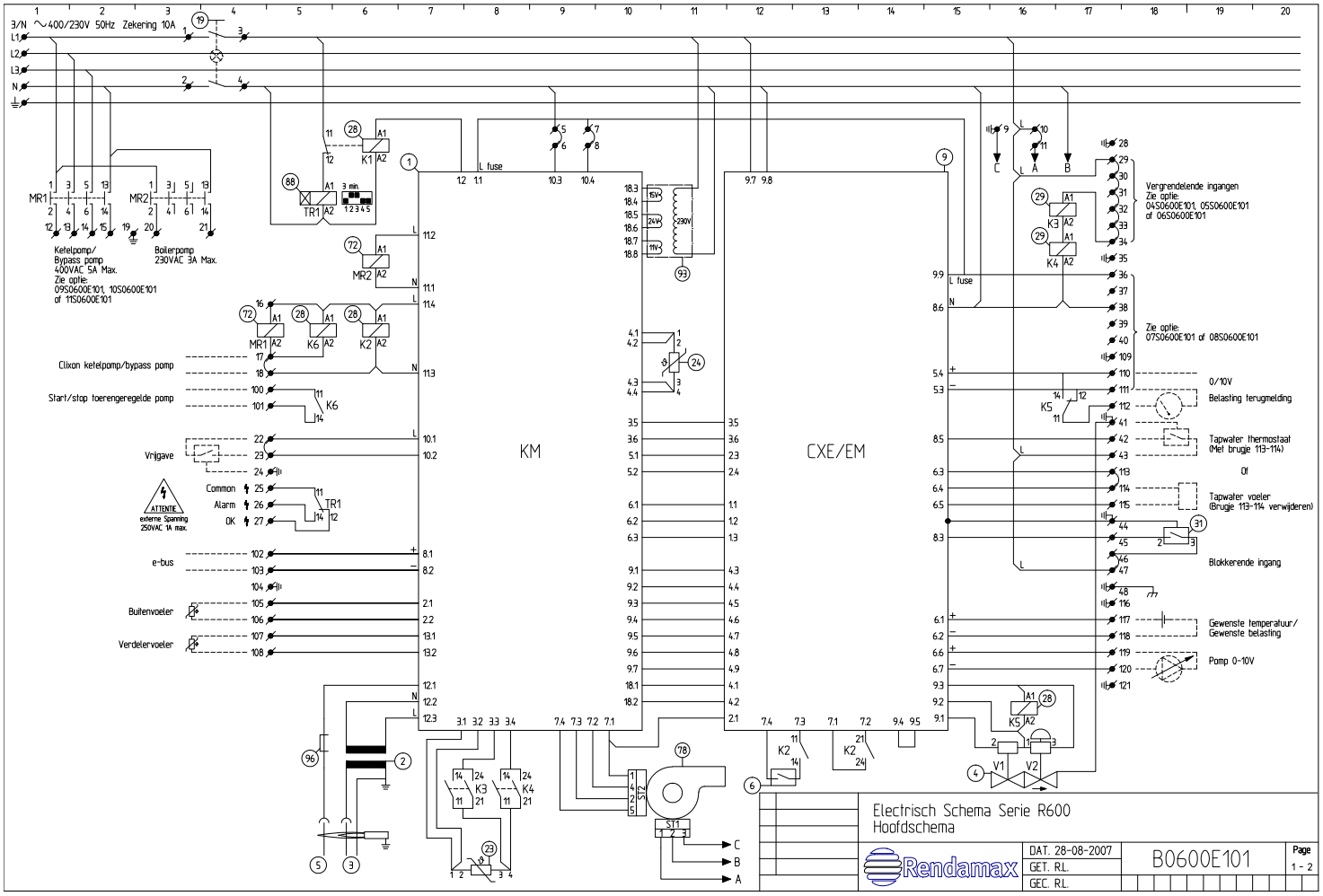
3/N ~400/230V 50Hz Zekering 10A
L1
L2
L3
N
MR1
MR2
Ketelpomp/
Bypass pomp
400VAC 5A Max.
Zie optie:
09S0600E101, 10S0600E101
of 11S0600E101
Boilerpomp
230VAC 3A Max.
K1
TR1
3 min.
MR2
MR1
K6
K2
Clixon ketelpomp/bypass pomp
Start/stop toerengeregelde pomp
Vrijgave
Common
Alarm
OK
ATTENTIE
externe Spanning
250VAC 1A max.
e-bus
Buitenvoeler
Verdelervoeler
L fuse
KM
CXE/EM
K3
K4
ST2
ST1
C
B
A
Vergrendelende ingangen
Zie optie:
04S0600E101, 05S0600E101
of 06S0600E101
Zie optie:
07S0600E101 of 08S0600E101
0/10V
Belasting terugmelding
Tapwater thermostaat
(Met brugje 113-114)
Of
Tapwater voeler
(Brugje 113-114 verwijderen)
Blokkerende ingang
Gewenste temperatuur/
Gewenste belasting
Pomp 0-10V
K5
V1
V2
Electrisch Schema Serie R600
Hoofdschema
Rendamax
DAT. 28-08-2007
GET. R.L.
GEC. R.L.
B0600E101
Page
1 - 2

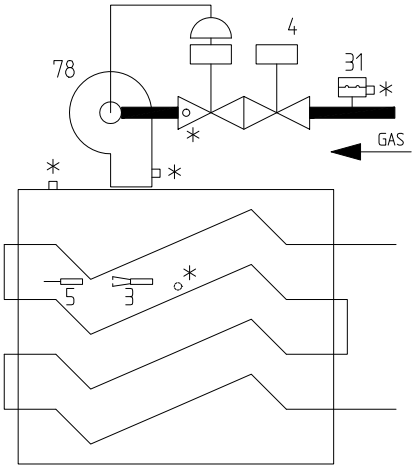

* Meetpunt

Gasstraat schema Serie R600

Rendamax

DAT. 28-08-2007
GET. R.L.
GEC. R.L.

B0600E101

Page 2 - 2

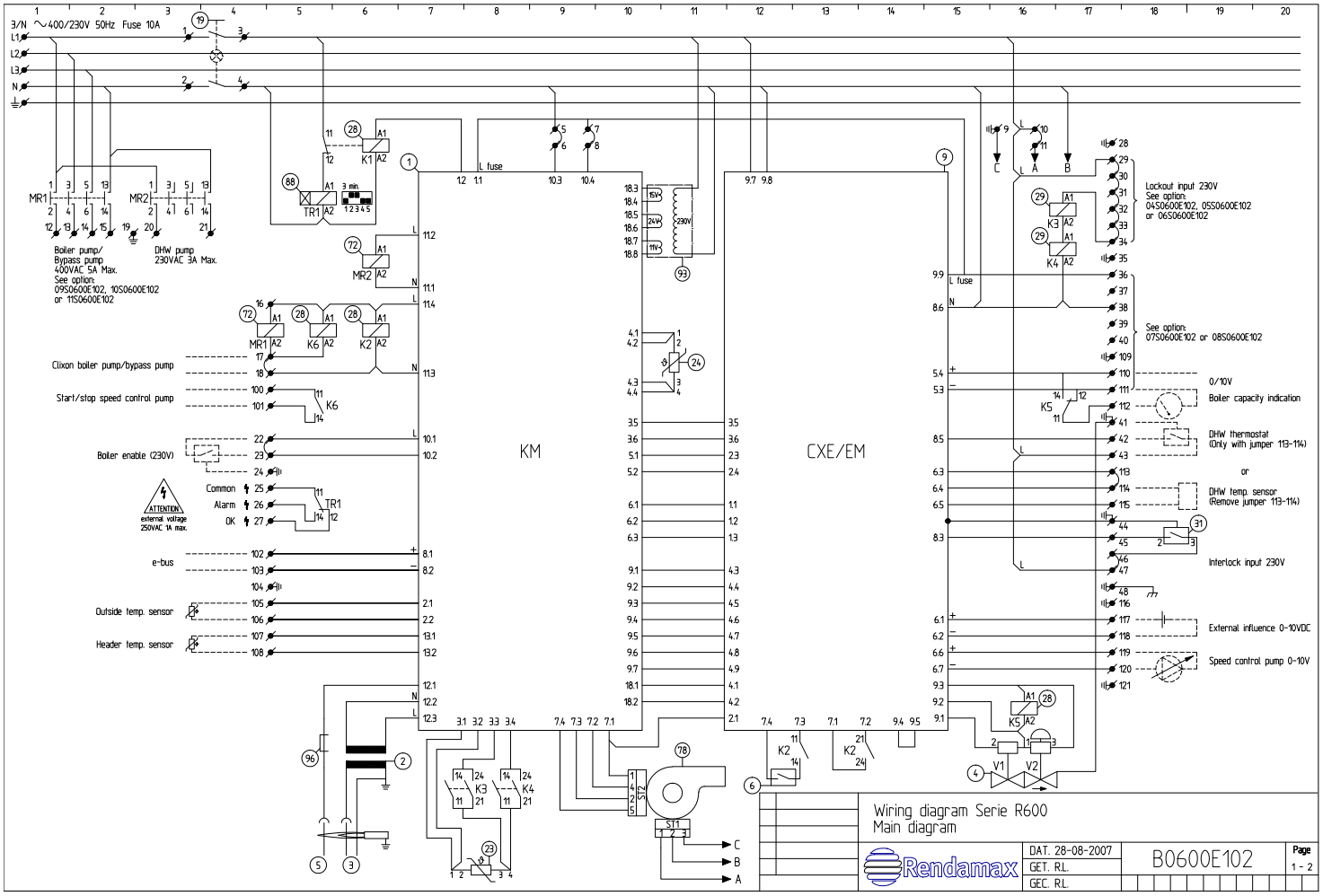
3/N ~400/230V 50Hz Fuse 10A
L1
L2
L3
N
MR1
MR2
Boiler pump/
Bypass pump
400VAC 5A Max.
See option:
09S0600E102, 10S0600E102
or 11S0600E102
DHW pump
230VAC 3A Max.
K1
TR1
3 min.
L fuse
KM
CXE/EM
Clixon boiler pump/bypass pump
Start/stop speed control pump
K6
K2
Boiler enable (230V)
ATTENTION
external voltage
250VAC 1A max.
Common
Alarm
OK
e-bus
Outside temp. sensor
Header temp. sensor
K3
K4
ST2
ST1
V1
V2
K5
Lockout input 230V
See option:
04S0600E102, 05S0600E102
or 06S0600E102
See option:
07S0600E102 or 08S0600E102
0/10V
Boiler capacity indication
DHW thermostat
(Only with jumper 113-114)
or
DHW temp. sensor
(Remove jumper 113-114)
Interlock input 230V
External influence 0-10VDC
Speed control pump 0-10V
Wiring diagram Serie R600
Main diagram
Rendamax
DAT. 28-08-2007
GET. R.L.
GEC. R.L.
B0600E102
Page
1 - 2

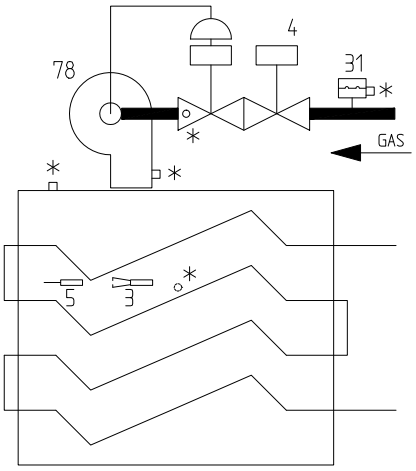

* Measure point

Gastrain Serie R600

Rendamax

DAT. 28-08-2007	B0600E102
GET. RL.	
GEC. RL.	

Page 2 - 2

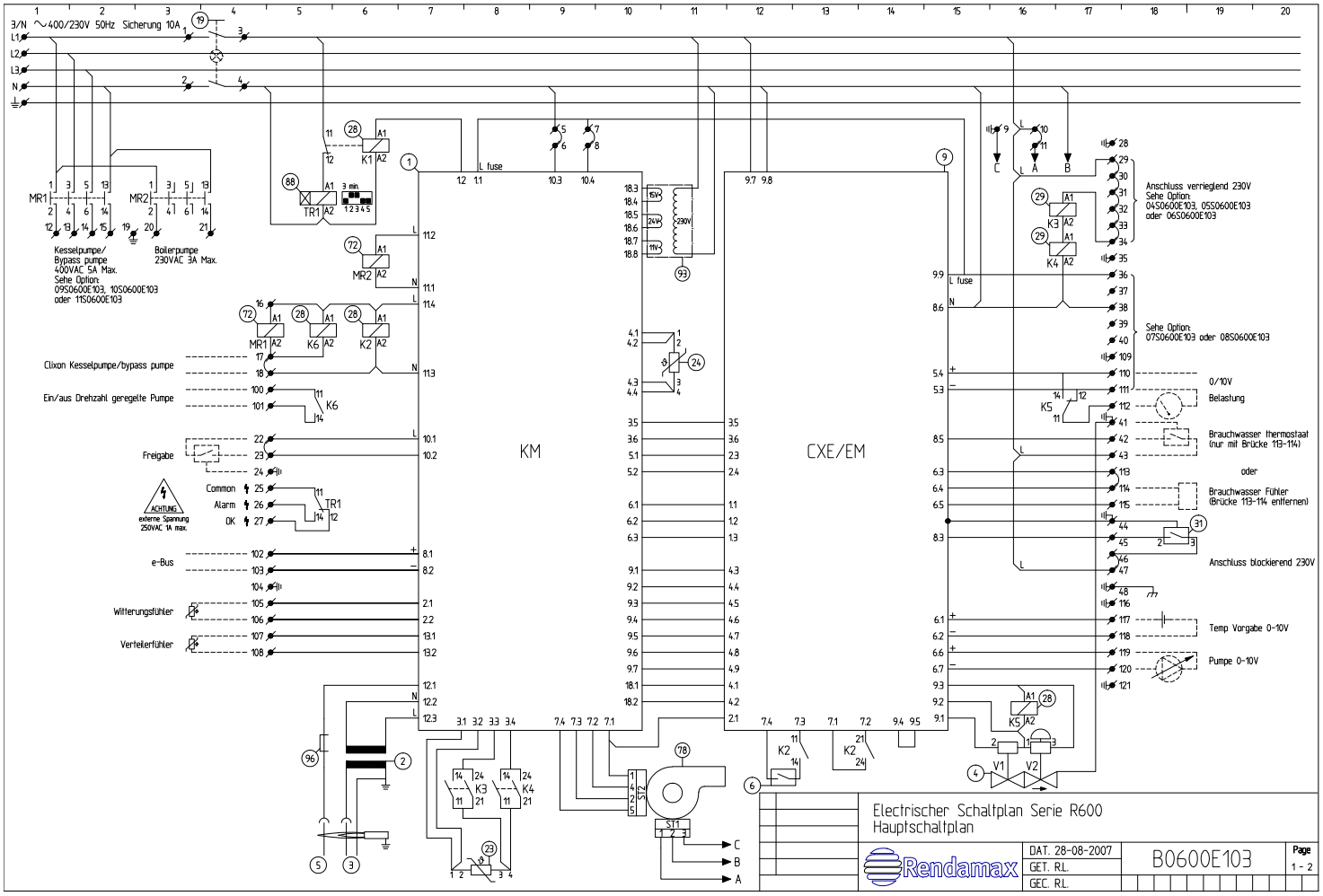

Electrischer Schaltplan Serie R600
Hauptschaltplan

Rendamax

DAT. 28-08-2007	B0600E103	Page 1 - 2
GET. R.L.		
GEC. R.L.		

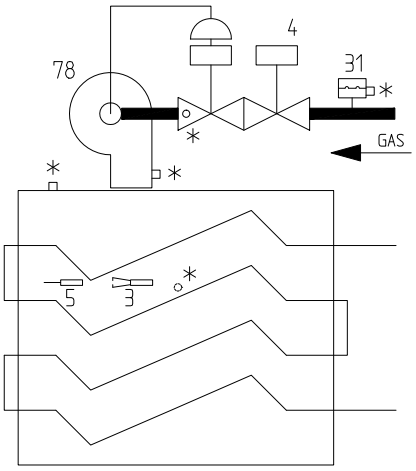

* Messpunkt

Gasstrasse Serie R600

Rendamax

DAT. 28-08-2007
GET. R.L.
GEC. R.L.

B0600E103

Page 2 - 2

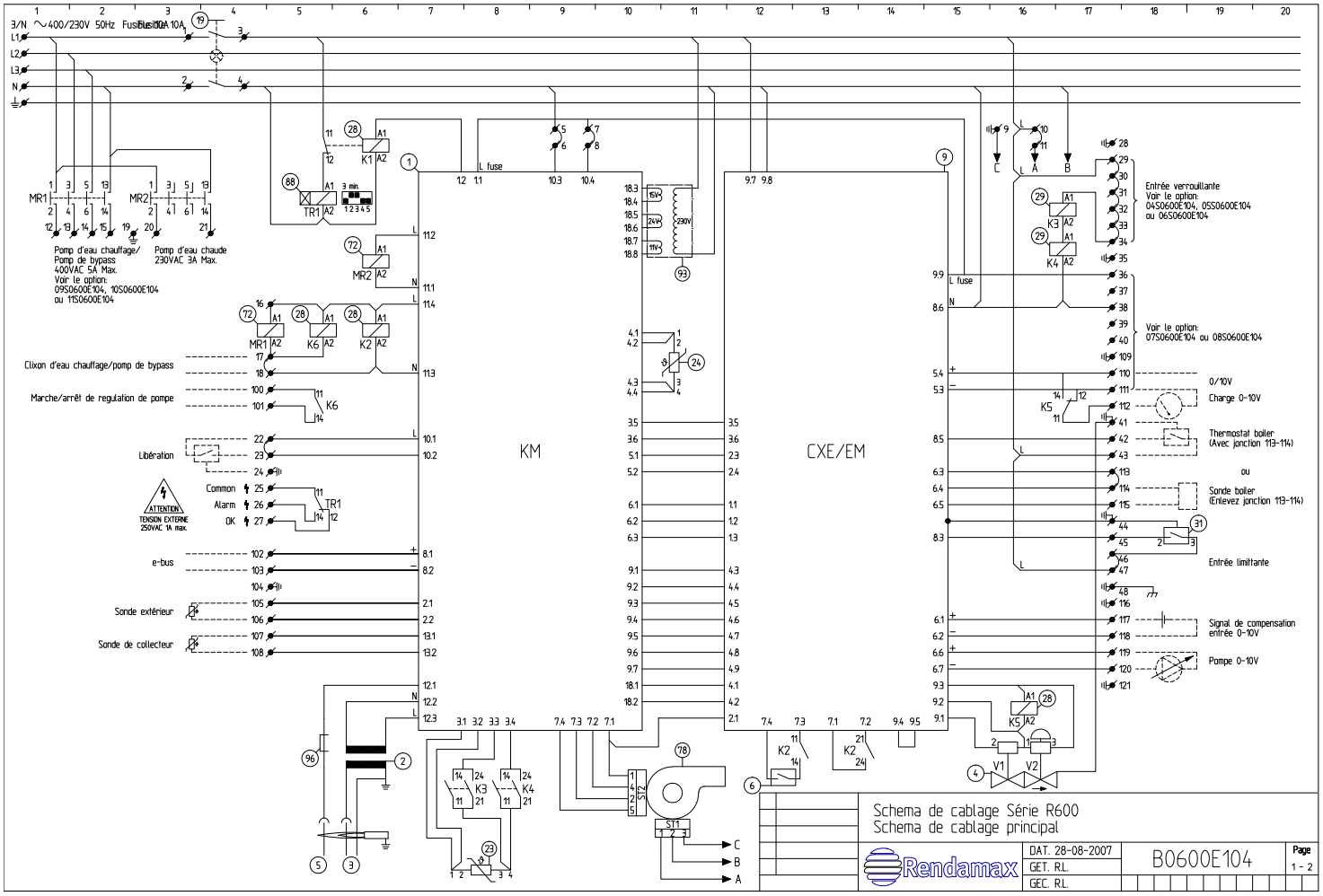
3/N ~400/230V 50Hz Fusible 10A
Pomp d'eau chauffage/ Pomp de bypass 400VAC 5A Max. Voir le option: 09S0600E104, 10S0600E104 ou 11S0600E104
Pomp d'eau chaude 230VAC 3A Max.
Clixon d'eau chauffage/pomp de bypass
Marche/arrêt de regulation de pompe
Libération
ATTENTION TENSION EXTERNE 250VAC 1A max.
Common
Alarm
OK
e-bus
Sonde extérieur
Sonde de collecteur
KM
CXE/EM
Entrée verrouillante Voir le option: 04S0600E104, 05S0600E104 ou 06S0600E104
Voir le option: 07S0600E104 ou 08S0600E104
0/10V
Charge 0-10V
Thermostat boiler (Avec jonction 113-114)
ou
Sonde boiler (Enlevez jonction 113-114)
Entrée limittante
Signal de compensation entrée 0-10V
Pompe 0-10V
Schema de cablage Série R600
Schema de cablage principal
Rendamax
DAT. 28-08-2007
GET. R.L.
GEC. R.L.
B0600E104
Page 1 - 2

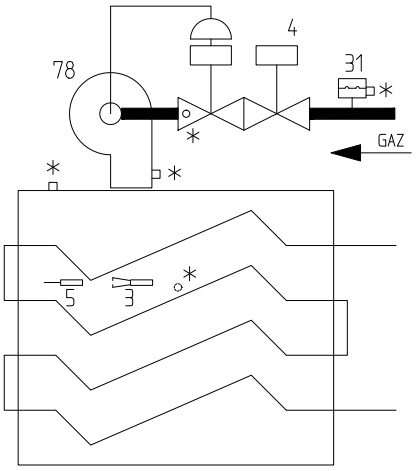

* Point de mesure

Ligne d' gaz Serié R600

Rendamax

DAT. 28-08-2007	B0600E104
GET. R.L.	
GEC. R.L.	

Page 2 - 2

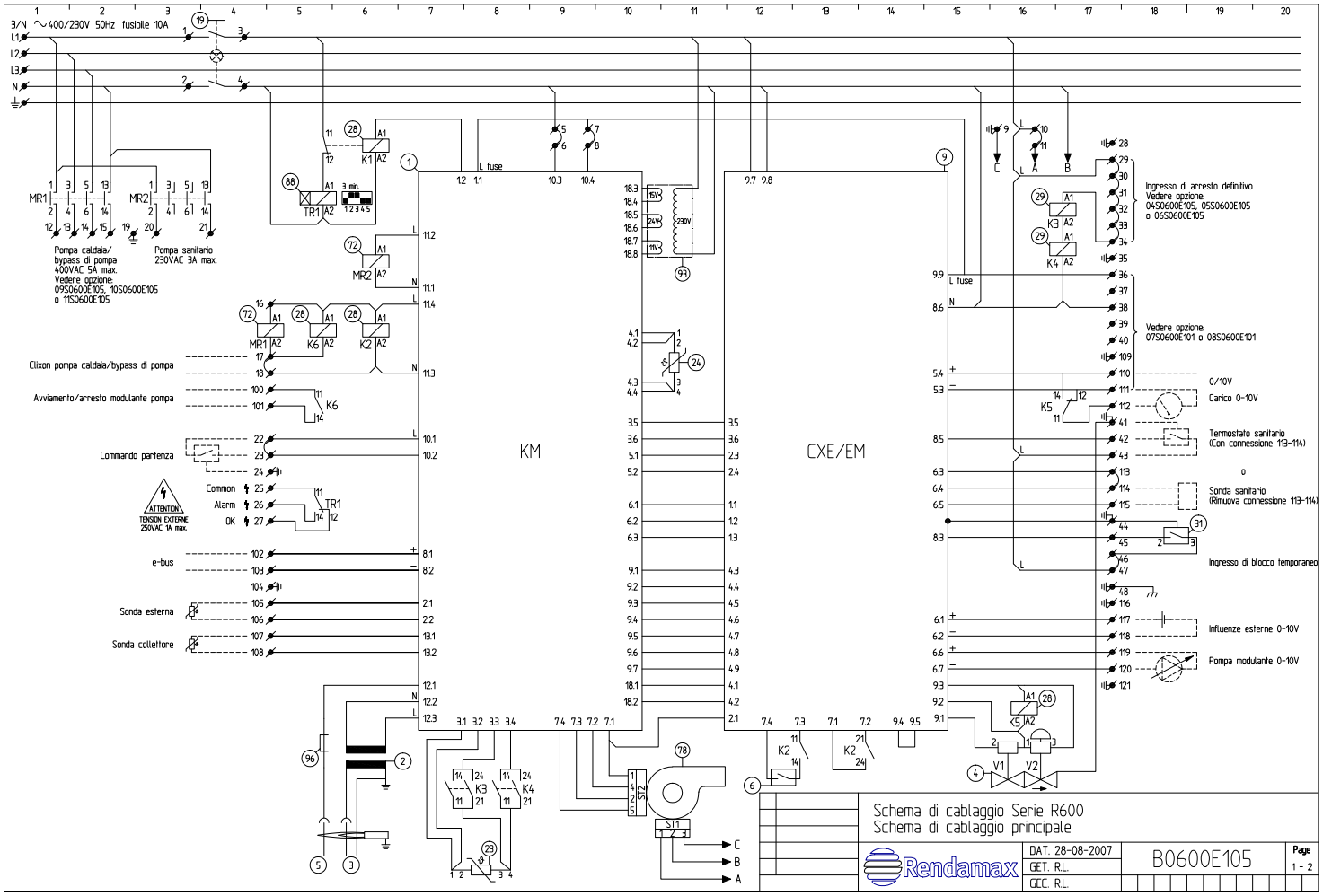
3/N ~400/230V 50Hz fusibile 10A
L1
L2
L3
N
MR1
MR2
Pompa caldaia/ bypass di pompa 400VAC 5A max. Vedere opzione: 09S0600E105, 10S0600E105 o 11S0600E105
Pompa sanitario 230VAC 3A max.
K1
TR1
3 min.
K6
K2
Clixon pompa caldaia/bypass di pompa
Avviamento/arresto modulante pompa
Commando partenza
Common
Alarm
OK
ATTENTION
TENSION EXTERNE 250VAC 1A max.
e-bus
Sonda esterna
Sonda collettore
KM
CXE/EM
L fuse
K3
K4
K5
V1
V2
ST1
ST2
Ingresso di arresto definitivo Vedere opzione: 04S0600E105, 05S0600E105 o 06S0600E105
Vedere opzione: 07S0600E101 o 08S0600E101
0/10V
Carico 0-10V
Termostato sanitario (Con connessione 113-114)
o
Sonda sanitario (Rimuova connessione 113-114)
Ingresso di blocco temporaneo
Influenze esterne 0-10V
Pompa modulante 0-10V
Schema di cablaggio Serie R600
Schema di cablaggio principale
Rendamax
DAT. 28-08-2007
GET. R.L.
GEC. R.L.
B0600E105
Page
1 - 2

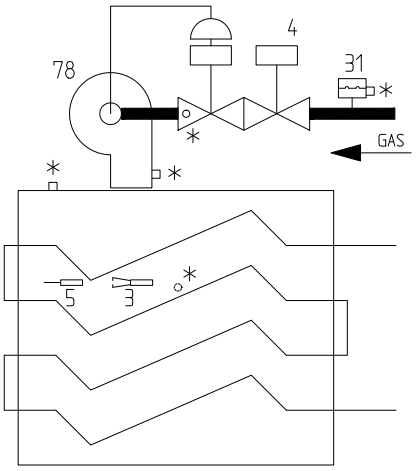

* Punto di misura

Condotto di gas Serie R600

Rendamax

DAT. 28-08-2007	B0600E105	Page 2 - 2
GET. R.L.		
GEC. R.L.		